Attachment A-1: Project Location Information

Trail Group	GPS Coordinates	County	Local Government	Type	Township	Range	Section(s)[1]	Route Category & Length (miles)
Brookston Loops	Western Terminus 92.7234901°W 46.8831224°N	St. Louis	Arrowhead	Township	51	18	7, 30	Main Route Category 1: 9.5 miles Category 2B: 7.2 miles Category 2C: 10.5 miles Category 2D: 0.1 miles Category 3: 1.4 miles Alternate Route Category 2B: 1.7 miles Category 2C: 2.7 miles Category 2D: 0.01 miles Category 3: 1.9 miles
Brookston Loops	Western Terminus 92.7234901°W 46.8831224°N	St. Louis	Arrowhead	Township	51	19	12, 13, 14, 22, 23, 24, 25, 27	
Brookston Loops	Western Terminus 92.7234901°W 46.8831224°N	St. Louis	Culver	Township	51	18	7, 8, 9, 10, 11, 17, 18, 19, 20, 21, 22, 25, 26, 27, 28, 29, 30	
Brookston Loops	Western Terminus 92.7234901°W 46.8831224°N	St. Louis	Culver	Township	51	19	24	
Brookston Loops	Western Terminus 92.7234901°W 46.8831224°N	St. Louis	Industrial	Township	51	17	17, 18, 19, 20, 30	
Brookston Loops	Western Terminus 92.7234901°W 46.8831224°N	St. Louis	Industrial	Township	51	18	25	
Canyon to Cotton	Northern Terminus 92.2289342°W 47.1985435°N	St. Louis	Gnesen	Township	53	14	7, 18	Main Route Category 2B: 0.6 miles Category 2C: 30.1 miles Category 2D: 0.1 miles Alternate Route Category 1: 2.1 miles Category 2B: 2.9 miles Category 2C: 15.9 miles Category 2D: 0.1 miles Category 3: 4.5 miles
Canyon to Cotton	Northern Terminus 92.2289342°W 47.1985435°N	St. Louis	Grand Lake	Township	52	16	2, 11, 14	
Canyon to Cotton	Northern Terminus 92.2289342°W 47.1985435°N	St. Louis	Whiteface Reservoir	Unorganized Territory	52	16	2	
Canyon to Cotton	Northern Terminus 92.2289342°W 47.1985435°N	St. Louis	Whiteface Reservoir	Unorganized Territory	53	14	7, 18	
Canyon to Cotton	Northern Terminus 92.2289342°W 47.1985435°N	St. Louis	Whiteface Reservoir	Unorganized Territory	53	15	1, 2, 3, 4, 5, 7, 8, 9, 10, 11, 12, 13, 14, 15, 16, 17, 18, 20, 21, 22, 28, 29, 30	
Canyon to Cotton	Northern Terminus 92.2289342°W 47.1985435°N	St. Louis	Whiteface Reservoir	Unorganized Territory	53	16	3, 9, 10, 13, 15, 20, 21, 22, 23, 24, 25, 26, 27, 29, 32, 34, 35, 36	
Canyon to Cotton	Northern Terminus 92.2289342°W 47.1985435°N	St. Louis	Whiteface Reservoir	Unorganized Territory	54	15	34, 36	
Cross Roads Connector	Western Terminus 92.4606101°W 46.8450615°N	St. Louis	Brevator	Township	50	17	1, 2	Main Route Category 1: 0.5 miles Category 2C: 1.6 miles
Cross Roads Connector	Western Terminus 92.4606101°W 46.8450615°N	St. Louis	Industrial	Township	50	17	1, 2	
Cross Roads Connector	Western Terminus 92.4606101°W 46.8450615°N	St. Louis	Industrial	Township	51	17	35	
Floodwood Loop	Western Terminus 92.9148781°W 46.9249326°N	St. Louis	Arrowhead	Township	51	19	7, 17, 18, 19, 20, 21, 22, 23	Main Route Category 1: 6.6 miles Category 2B: 3.3 miles Category 2C: 9.5 miles Category 2D: 0.04 miles
Floodwood Loop	Western Terminus 92.9148781°W 46.9249326°N	St. Louis	Arrowhead	Township	51	20	24	
Floodwood Loop	Western Terminus 92.9148781°W 46.9249326°N	St. Louis	Floodwood	City	51	20	5, 6, 7	

Attachment A-1: Project Location Information

Trail Group	GPS Coordinates	County	Local Government	Type	Township	Range	Section(s)[1]	Route Category & Length (miles)
Floodwood Loop	Western Terminus 92.9148781°W 46.9249326°N	St. Louis	Floodwood	Township	51	20	2, 3, 4, 5, 11, 12, 13, 14	
Lumberjack Extension	Northern Terminus 92.3338763°W 46.9852962°N	St. Louis	Grand Lake	Township	51	16	4, 5, 6, 7	Main Route Category 1: 1.0 miles Category 2C: 9.3 miles Category 2D: 0.7 miles Category 3: 1.1 miles Alternate Route Category 3: 0.6 miles
Lumberjack Extension	Northern Terminus 92.3338763°W 46.9852962°N	St. Louis	Grand Lake	Township	51	17	12	
Lumberjack Extension	Northern Terminus 92.3338763°W 46.9852962°N	St. Louis	Grand Lake	Township	52	16	14, 22, 23, 27, 28, 33	
Lumberjack Extension	Northern Terminus 92.3338763°W 46.9852962°N	St. Louis	Industrial	Township	51	17	12, 13, 14, 23, 24, 25, 26, 36	
Lumberjack to Brookston	Northern Terminus 92.6040452°W 46.8673939°N	Carlton	Cloquet	City	49	17	10, 14, 15	Main Route Category 1: 1.4 miles Category 2B: 5.6 miles Category 2C: 2.6 miles Category 3: 2.0 miles Alternate Route Category 2C: 0.2 miles Category 3: 0.6 miles
Lumberjack to Brookston	Northern Terminus 92.6040452°W 46.8673939°N	St. Louis	Brevator	Township	50	17	6, 7, 8, 9, 14, 15, 16, 17, 34	
Lumberjack to Brookston	Northern Terminus 92.6040452°W 46.8673939°N	St. Louis	Brookston	City	51	18	34, 35	
Lumberjack to Brookston	Northern Terminus 92.6040452°W 46.8673939°N	St. Louis	Culver	Township	50	18	2	
Lumberjack to Brookston	Northern Terminus 92.6040452°W 46.8673939°N	St. Louis	Culver	Township	51	18	35	
Lumberjack to Brookston	Northern Terminus 92.6040452°W 46.8673939°N	St. Louis	Stoney Brook	Township	50	17	6, 7	
Lumberjack to Brookston	Northern Terminus 92.6040452°W 46.8673939°N	St. Louis	Stoney Brook	Township	50	18	1, 2, 12	
Road Route Connections	Northern Terminus 92.0583026°W 47.3722004°N	Carlton	Brevator	Township	49	17	1	Main Route Category 1: 259.4 miles Category 2B: 3.2 miles Category 2C: 14.7 miles Category 3: 2.0 miles Alternate Route Category 1: 4.3 miles Category 2B: 0.7 miles Category 3: 2.8 miles
Road Route Connections	Northern Terminus 92.0583026°W 47.3722004°N	Carlton	Cloquet	City	49	17	1, 3, 10, 11, 12, 13, 14, 23, 25, 26, 35	
Road Route Connections	Northern Terminus 92.0583026°W 47.3722004°N	Carlton	Midway	Township	49	16	12, 25	
Road Route Connections	Northern Terminus 92.0583026°W 47.3722004°N	Carlton	Scanlon	City	49	16	19, 30	
Road Route Connections	Northern Terminus 92.0583026°W 47.3722004°N	Carlton	Scanlon	City	49	17	25	
Road Route Connections	Northern Terminus 92.0583026°W 47.3722004°N	Carlton	Thomson	Township	49	16	4, 5, 6, 7, 8, 9, 10, 11, 12, 13, 14, 15, 16, 17, 18, 20, 21, 22, 23, 24, 25, 29, 30	
Road Route Connections	Northern Terminus 92.0583026°W 47.3722004°N	Carlton	Thomson	Township	49	17	12, 13	
Road Route Connections	Northern Terminus 92.0583026°W 47.3722004°N	Carlton	Twin Lakes	Township	49	16	30	
Road Route Connections	Northern Terminus 92.0583026°W 47.3722004°N	St. Louis	Alborn	Township	51	18	2	

Attachment A-1: Project Location Information

Trail Group	GPS Coordinates	County	Local Government	Type	Township	Range	Section(s)[1]	Route Category & Length (miles)
Road Route Connections	Northern Terminus 92.0583026°W 47.3722004°N	St. Louis	Alborn	Township	52	17	19	
Road Route Connections	Northern Terminus 92.0583026°W 47.3722004°N	St. Louis	Alborn	Township	52	18	12, 13, 14, 23, 24, 26, 35, 1, 2, 3, 10, 11, 12	
Road Route Connections	Northern Terminus 92.0583026°W 47.3722004°N	St. Louis	Arrowhead	Township	50	19	1, 2, 3, 10, 11, 12	
Road Route Connections	Northern Terminus 92.0583026°W 47.3722004°N	St. Louis	Arrowhead	Township	51	18	6	
Road Route Connections	Northern Terminus 92.0583026°W 47.3722004°N	St. Louis	Arrowhead	Township	51	19	1, 2, 3, 4, 5, 7, 8, 11, 12, 26, 34, 35, 36	
Road Route Connections	Northern Terminus 92.0583026°W 47.3722004°N	St. Louis	Arrowhead	Township	51	20	12	
Road Route Connections	Northern Terminus 92.0583026°W 47.3722004°N	St. Louis	Brevator	Township	49	17	1	
Road Route Connections	Northern Terminus 92.0583026°W 47.3722004°N	St. Louis	Brevator	Township	50	16	6	
Road Route Connections	Northern Terminus 92.0583026°W 47.3722004°N	St. Louis	Brevator	Township	50	17	1, 14, 23, 24, 26, 34, 35, 36	
Road Route Connections	Northern Terminus 92.0583026°W 47.3722004°N	St. Louis	Brookston	City	51	18	27, 34	
Road Route Connections	Northern Terminus 92.0583026°W 47.3722004°N	St. Louis	Canosia	Township	51	15	30	
Road Route Connections	Northern Terminus 92.0583026°W 47.3722004°N	St. Louis	Canosia	Township	51	16	25	
Road Route Connections	Northern Terminus 92.0583026°W 47.3722004°N	St. Louis	Cloquet	City	49	17	1, 3	
Road Route Connections	Northern Terminus 92.0583026°W 47.3722004°N	St. Louis	Cloquet	City	50	17	34	
Road Route Connections	Northern Terminus 92.0583026°W 47.3722004°N	St. Louis	Colvin	Township	56	15	19, 27, 28, 29, 30, 34	
Road Route Connections	Northern Terminus 92.0583026°W 47.3722004°N	St. Louis	Colvin	Township	56	16	24	
Road Route Connections	Northern Terminus 92.0583026°W 47.3722004°N	St. Louis	Cotton	Township	54	16	1, 2, 3, 4, 6, 7, 8, 9, 11, 14, 23, 26, 34, 35	
Road Route Connections	Northern Terminus 92.0583026°W 47.3722004°N	St. Louis	Cotton	Township	54	17	10, 12, 13, 14, 15	
Road Route Connections	Northern Terminus 92.0583026°W 47.3722004°N	St. Louis	Culver	Township	50	18	6	
Road Route Connections	Northern Terminus 92.0583026°W 47.3722004°N	St. Louis	Culver	Township	51	17	7, 19	
Road Route Connections	Northern Terminus 92.0583026°W 47.3722004°N	St. Louis	Culver	Township	51	18	1, 2, 6, 7, 8, 11, 12, 13, 14, 22, 23, 24, 27, 28, 31, 32, 33, 34	
Road Route Connections	Northern Terminus 92.0583026°W 47.3722004°N	St. Louis	Culver	Township	51	19	36	
Road Route Connections	Northern Terminus 92.0583026°W 47.3722004°N	St. Louis	Duluth	City	49	15	10, 15	
Road Route Connections	Northern Terminus 92.0583026°W 47.3722004°N	St. Louis	Ellsburg	Township	54	16	6	
Road Route Connections	Northern Terminus 92.0583026°W 47.3722004°N	St. Louis	Ellsburg	Township	55	16	18, 19, 29, 30, 31	
Road Route Connections	Northern Terminus 92.0583026°W 47.3722004°N	St. Louis	Floodwood	Township	51	20	2, 11, 12	
Road Route Connections	Northern Terminus 92.0583026°W 47.3722004°N	St. Louis	Fredenberg	Township	52	14	30	

Attachment A-1: Project Location Information

Trail Group	GPS Coordinates	County	Local Government	Type	Township	Range	Section(s)[1]	Route Category & Length (miles)
Road Route Connections	Northern Terminus 92.0583026°W 47.3722004°N	St. Louis	Fredenberg	Township	52	15	7, 8, 16, 17, 18, 21, 22, 23, 24, 25, 26, 27, 28, 29, 34, 35, 36	
Road Route Connections	Northern Terminus 92.0583026°W 47.3722004°N	St. Louis	Fredenberg	Township	52	16	13	
Road Route Connections	Northern Terminus 92.0583026°W 47.3722004°N	St. Louis	Gnesen	Township	52	13	19	
Road Route Connections	Northern Terminus 92.0583026°W 47.3722004°N	St. Louis	Gnesen	Township	52	14	17, 18, 19, 20, 21, 22, 23, 24, 29, 30, 31	
Road Route Connections	Northern Terminus 92.0583026°W 47.3722004°N	St. Louis	Gnesen	Township	52	15	36	
Road Route Connections	Northern Terminus 92.0583026°W 47.3722004°N	St. Louis	Gnesen	Township	54	14	31, 33	
Road Route Connections	Northern Terminus 92.0583026°W 47.3722004°N	St. Louis	Grand Lake	Township	50	16	1, 2, 3, 4	
Road Route Connections	Northern Terminus 92.0583026°W 47.3722004°N	St. Louis	Grand Lake	Township	51	16	2, 3, 11, 14, 15, 16, 17, 18, 19, 21, 22, 23, 25, 26, 32, 33, 34, 35, 36	
Road Route Connections	Northern Terminus 92.0583026°W 47.3722004°N	St. Louis	Grand Lake	Township	51	17	24	
Road Route Connections	Northern Terminus 92.0583026°W 47.3722004°N	St. Louis	Grand Lake	Township	52	16	13, 14, 23, 26, 35	
Road Route Connections	Northern Terminus 92.0583026°W 47.3722004°N	St. Louis	Heikkala Lake	Unorganized Territory	56	16	3, 4, 5, 6, 10, 14, 15, 16, 23, 24, 26	
Road Route Connections	Northern Terminus 92.0583026°W 47.3722004°N	St. Louis	Heikkala Lake	Unorganized Territory	56	17	1, 2, 3, 10, 11, 12	
Road Route Connections	Northern Terminus 92.0583026°W 47.3722004°N	St. Louis	Hermantown	City	50	15	6, 7, 18, 19, 20, 21, 27, 28, 29, 34	
Road Route Connections	Northern Terminus 92.0583026°W 47.3722004°N	St. Louis	Hermantown	City	50	16	1, 12, 13	
Road Route Connections	Northern Terminus 92.0583026°W 47.3722004°N	St. Louis	Industrial	Township	50	17	1	
Road Route Connections	Northern Terminus 92.0583026°W 47.3722004°N	St. Louis	Industrial	Township	51	17	4, 5, 7, 8, 9, 10, 11, 12, 15, 16, 17, 18, 19, 20, 21, 22, 23, 24, 26, 27, 28, 35, 36	
Road Route Connections	Northern Terminus 92.0583026°W 47.3722004°N	St. Louis	Industrial	Township	52	17	33	
Road Route Connections	Northern Terminus 92.0583026°W 47.3722004°N	St. Louis	Midway	Township	49	15	4, 5, 6, 7, 9, 10, 15, 16, 17, 18, 19, 20, 21, 29, 30	
Road Route Connections	Northern Terminus 92.0583026°W 47.3722004°N	St. Louis	Midway	Township	49	16	12, 25	
Road Route Connections	Northern Terminus 92.0583026°W 47.3722004°N	St. Louis	New Independence	Township	52	17	3, 4, 7, 8, 9, 10, 11, 18, 19, 26, 27, 28, 29, 30, 33	
Road Route Connections	Northern Terminus 92.0583026°W 47.3722004°N	St. Louis	New Independence	Township	52	18	13, 24	
Road Route Connections	Northern Terminus 92.0583026°W 47.3722004°N	St. Louis	New Independence	Township	53	17	34	
Road Route Connections	Northern Terminus 92.0583026°W 47.3722004°N	St. Louis	Normanna	Township	52	13	18, 19	
Road Route Connections	Northern Terminus 92.0583026°W 47.3722004°N	St. Louis	Northland	Township	52	17	3	
Road Route Connections	Northern Terminus 92.0583026°W 47.3722004°N	St. Louis	Northland	Township	53	16	30	
Road Route Connections	Northern Terminus 92.0583026°W 47.3722004°N	St. Louis	Northland	Township	53	17	25, 26, 34, 35	
Road Route Connections	Northern Terminus 92.0583026°W 47.3722004°N	St. Louis	Proctor	City	49	15	3, 9, 10, 15, 16	

Attachment A-1: Project Location Information

Trail Group	GPS Coordinates	County	Local Government	Type	Township	Range	Section(s)[1]	Route Category & Length (miles)
Road Route Connections	Northern Terminus 92.0583026°W 47.3722004°N	St. Louis	Proctor	City	50	15	34	
Road Route Connections	Northern Terminus 92.0583026°W 47.3722004°N	St. Louis	Solway	Township	50	15	18	
Road Route Connections	Northern Terminus 92.0583026°W 47.3722004°N	St. Louis	Solway	Township	50	16	1, 3, 5, 6, 13, 14, 15, 16, 17, 19, 20, 21, 22, 23, 24, 27, 29, 31, 32, 33, 34, 24, 36	
Road Route Connections	Northern Terminus 92.0583026°W 47.3722004°N	St. Louis	Solway	Township	50	17	24, 36	
Road Route Connections	Northern Terminus 92.0583026°W 47.3722004°N	St. Louis	Solway	Township	51	16	32	
Road Route Connections	Northern Terminus 92.0583026°W 47.3722004°N	St. Louis	Stoney Brook	Township	50	18	1, 2, 6	
Road Route Connections	Northern Terminus 92.0583026°W 47.3722004°N	St. Louis	Thomson	Township	49	15	18	
Road Route Connections	Northern Terminus 92.0583026°W 47.3722004°N	St. Louis	Thomson	Township	49	16	12, 13, 25	
Road Route Connections	Northern Terminus 92.0583026°W 47.3722004°N	St. Louis	Whiteface Reservoir	Unorganized Territory	53	15	1, 2, 3, 4, 5, 6	
Road Route Connections	Northern Terminus 92.0583026°W 47.3722004°N	St. Louis	Whiteface Reservoir	Unorganized Territory	53	16	1, 2, 3, 27, 28, 29, 30, 31, 32, 33, 34	
Road Route Connections	Northern Terminus 92.0583026°W 47.3722004°N	St. Louis	Whiteface Reservoir	Unorganized Territory	54	14	31, 32, 33	
Road Route Connections	Northern Terminus 92.0583026°W 47.3722004°N	St. Louis	Whiteface Reservoir	Unorganized Territory	54	15	4, 5, 6, 7, 8, 33, 34, 36	
Road Route Connections	Northern Terminus 92.0583026°W 47.3722004°N	St. Louis	Whiteface Reservoir	Unorganized Territory	54	16	1, 34	
Road Route Connections	Northern Terminus 92.0583026°W 47.3722004°N	St. Louis	Whiteface Reservoir	Unorganized Territory	55	14	3, 6, 7, 8, 10, 15, 16, 17, 18	
Road Route Connections	Northern Terminus 92.0583026°W 47.3722004°N	St. Louis	Whiteface Reservoir	Unorganized Territory	55	15	1, 2, 3, 11, 12, 13, 23, 24, 26, 33, 34, 35	
Road Route Connections	Northern Terminus 92.0583026°W 47.3722004°N	St. Louis	Whiteface Reservoir	Unorganized Territory	56	14	1, 12, 13, 14, 23, 26, 27, 34	
Road Route Connections	Northern Terminus 92.0583026°W 47.3722004°N	St. Louis	Whiteface Reservoir	Unorganized Territory	56	15	34	
Road Route Connections	Northern Terminus 92.0583026°W 47.3722004°N	St. Louis	Whiteface Reservoir	Unorganized Territory	57	14	36	
Taft to Canyon	Western Terminus 92.4612948°W 46.9606979°N	St. Louis	Fredenberg	Township	52	15	19, 20, 21, 28, 29, 30	Main Route Category 2B: 31.6 miles Category 2C: 8.8 miles Category 3: 1.3 miles Alternate Route Category 2B: 7.8 miles Category 2C: 10.6 miles Category 2D: 0.4 miles Category 3: 1.1 miles
Taft to Canyon	Western Terminus 92.4612948°W 46.9606979°N	St. Louis	Grand Lake	Township	52	15	30	
Taft to Canyon	Western Terminus 92.4612948°W 46.9606979°N	St. Louis	Grand Lake	Township	52	16	3, 5, 6, 7, 8, 9, 10, 11, 14, 15, 16, 17, 18, 19, 20, 21, 22, 23, 25, 26, 29, 30, 31, 32, 35, 36	
Taft to Canyon	Western Terminus 92.4612948°W 46.9606979°N	St. Louis	Grand Lake	Township	52	17	12, 24, 25	
Taft to Canyon	Western Terminus 92.4612948°W 46.9606979°N	St. Louis	New Independence	Township	52	16	6, 7	
Taft to Canyon	Western Terminus 92.4612948°W 46.9606979°N	St. Louis	New Independence	Township	52	17	1, 11, 12, 13, 14, 23, 24, 25, 26	

Attachment A-1: Project Location Information

Trail Group	GPS Coordinates	County	Local Government	Type	Township	Range	Section(s)[1]	Route Category & Length (miles)
Taft to Canyon	Western Terminus 92.4612948°W 46.9606979°N	St. Louis	Whiteface Reservoir	Unorganized Territory	52	16	3, 5, 6	
Taft to Canyon	Western Terminus 92.4612948°W 46.9606979°N	St. Louis	Whiteface Reservoir	Unorganized Territory	53	16	27, 28, 30, 31, 32, 33, 34	
West Lavaque Trail System	Western Terminus 92.3017799°W 46.8583183°N	St. Louis	Canosia	Township	51	15	3, 4, 5, 8, 10, 15, 17, 18, 19, 20, 22, 23, 26, 30, 31, 32, 33, 34, 35	Main Route Category 1: 3.1 miles Category 2B: 1.9 miles Category 2C: 7.3 miles Alternate Route Category 1: 10.5 miles Category 2C: 1.3 miles
West Lavaque Trail System	Western Terminus 92.3017799°W 46.8583183°N	St. Louis	Canosia	Township	52	15	34	
West Lavaque Trail System	Western Terminus 92.3017799°W 46.8583183°N	St. Louis	Fredenberg	Township	51	15	4	
West Lavaque Trail System	Western Terminus 92.3017799°W 46.8583183°N	St. Louis	Fredenberg	Township	52	15	27, 28, 33, 34, 35	

Attachment A2: Public Land Survey 1/4, 1/4 Section, Township, Range

Trail Group	Trail Route Category	Township	Range	Section	QQ ID
Brookston Loops	Existing Roadways Open to ATV Traffic - No Improvements Needed	51	17	17	NESW
Brookston Loops	Existing Roadways Open to ATV Traffic - No Improvements Needed	51	17	17	NWSE
Brookston Loops	Existing Roadways Open to ATV Traffic - No Improvements Needed	51	17	17	NWSW
Brookston Loops	Existing Roadways Open to ATV Traffic - No Improvements Needed	51	17	17	SWSW
Brookston Loops	Existing Roadways Open to ATV Traffic - No Improvements Needed	51	17	19	NENE
Brookston Loops	Existing Roadways Open to ATV Traffic - No Improvements Needed	51	17	19	NWNE
Brookston Loops	Existing Roadways Open to ATV Traffic - No Improvements Needed	51	17	20	NWNW
Brookston Loops	Existing Roadways Open to ATV Traffic - No Improvements Needed	51	18	8	NENE
Brookston Loops	Existing Roadways Open to ATV Traffic - No Improvements Needed	51	18	8	NENW
Brookston Loops	Existing Roadways Open to ATV Traffic - No Improvements Needed	51	18	8	NWNE
Brookston Loops	Existing Roadways Open to ATV Traffic - No Improvements Needed	51	18	9	NENE
Brookston Loops	Existing Roadways Open to ATV Traffic - No Improvements Needed	51	18	9	NENW
Brookston Loops	Existing Roadways Open to ATV Traffic - No Improvements Needed	51	18	9	NWNE
Brookston Loops	Existing Roadways Open to ATV Traffic - No Improvements Needed	51	18	9	NWNW
Brookston Loops	Existing Roadways Open to ATV Traffic - No Improvements Needed	51	18	10	NENE
Brookston Loops	Existing Roadways Open to ATV Traffic - No Improvements Needed	51	18	10	NENW
Brookston Loops	Existing Roadways Open to ATV Traffic - No Improvements Needed	51	18	10	NWNE
Brookston Loops	Existing Roadways Open to ATV Traffic - No Improvements Needed	51	18	10	NWNW
Brookston Loops	Existing Roadways Open to ATV Traffic - No Improvements Needed	51	18	11	NENW
Brookston Loops	Existing Roadways Open to ATV Traffic - No Improvements Needed	51	18	11	NWNW
Brookston Loops	Existing Roadways Open to ATV Traffic - No Improvements Needed	51	18	17	NESE
Brookston Loops	Existing Roadways Open to ATV Traffic - No Improvements Needed	51	18	17	NESW
Brookston Loops	Existing Roadways Open to ATV Traffic - No Improvements Needed	51	18	17	NWSE
Brookston Loops	Existing Roadways Open to ATV Traffic - No Improvements Needed	51	18	17	NWSW
Brookston Loops	Existing Roadways Open to ATV Traffic - No Improvements Needed	51	18	17	SESE
Brookston Loops	Existing Roadways Open to ATV Traffic - No Improvements Needed	51	18	20	NENE
Brookston Loops	Existing Roadways Open to ATV Traffic - No Improvements Needed	51	18	21	NENE
Brookston Loops	Existing Roadways Open to ATV Traffic - No Improvements Needed	51	18	21	NENW
Brookston Loops	Existing Roadways Open to ATV Traffic - No Improvements Needed	51	18	21	NWNE
Brookston Loops	Existing Roadways Open to ATV Traffic - No Improvements Needed	51	18	21	NWNW
Brookston Loops	Existing Roadways Open to ATV Traffic - No Improvements Needed	51	18	22	NENW
Brookston Loops	Existing Roadways Open to ATV Traffic - No Improvements Needed	51	18	22	NWNE
Brookston Loops	Existing Roadways Open to ATV Traffic - No Improvements Needed	51	18	22	NWNW
Brookston Loops	Existing Roadways Open to ATV Traffic - No Improvements Needed	51	18	25	NESW
Brookston Loops	Existing Roadways Open to ATV Traffic - No Improvements Needed	51	18	25	NWSE
Brookston Loops	Existing Roadways Open to ATV Traffic - No Improvements Needed	51	18	25	SESE
Brookston Loops	Existing Roadways Open to ATV Traffic - No Improvements Needed	51	18	25	SESW
Brookston Loops	Existing Roadways Open to ATV Traffic - No Improvements Needed	51	18	25	SWSE
Brookston Loops	Existing Roadways Open to ATV Traffic - No Improvements Needed	51	18	25	SWSW
Brookston Loops	Existing Roadways Open to ATV Traffic - No Improvements Needed	51	18	26	SESE
Brookston Loops	Existing Roadways Open to ATV Traffic - No Improvements Needed	51	18	26	SWSE
Brookston Loops	Existing Roadways Open to ATV Traffic - No Improvements Needed	51	18	26	Gov. Lot 1
Brookston Loops	Existing Roadways Open to ATV Traffic - No Improvements Needed	51	18	26	Gov. Lot 2
Brookston Loops	Existing Roadways Open to ATV Traffic - No Improvements Needed	51	18	27	Gov. Lot 4
Brookston Loops	Existing Roadways Open to ATV Traffic - No Improvements Needed	51	18	27	Gov. Lot 99
Brookston Loops	Existing Trails or Roadways - Improvements Needed	51	17	19	NENE
Brookston Loops	Existing Trails or Roadways - Improvements Needed	51	17	19	NESW
Brookston Loops	Existing Trails or Roadways - Improvements Needed	51	17	19	NWNE
Brookston Loops	Existing Trails or Roadways - Improvements Needed	51	17	19	NWSE
Brookston Loops	Existing Trails or Roadways - Improvements Needed	51	17	19	SENE
Brookston Loops	Existing Trails or Roadways - Improvements Needed	51	17	19	SESW
Brookston Loops	Existing Trails or Roadways - Improvements Needed	51	17	19	SWNE

Attachment A2: Public Land Survey 1/4, 1/4 Section, Township, Range

Trail Group	Trail Route Category	Township	Range	Section	QQ ID
Brookston Loops	Existing Trails or Roadways - Improvements Needed	51	17	20	NWNW
Brookston Loops	Existing Trails or Roadways - Improvements Needed	51	17	20	Gov. Lot 7
Brookston Loops	Existing Trails or Roadways - Improvements Needed	51	17	30	NENW
Brookston Loops	Existing Trails or Roadways - Improvements Needed	51	17	30	NESW
Brookston Loops	Existing Trails or Roadways - Improvements Needed	51	17	30	SENW
Brookston Loops	Existing Trails or Roadways - Improvements Needed	51	17	30	Gov. Lot 3
Brookston Loops	Existing Trails or Roadways - Improvements Needed	51	18	7	NESW
Brookston Loops	Existing Trails or Roadways - Improvements Needed	51	18	7	NWSE
Brookston Loops	Existing Trails or Roadways - Improvements Needed	51	18	7	Gov. Lot 3
Brookston Loops	Existing Trails or Roadways - Improvements Needed	51	18	7	Gov. Lot 4
Brookston Loops	Existing Trails or Roadways - Improvements Needed	51	18	17	NWSW
Brookston Loops	Existing Trails or Roadways - Improvements Needed	51	18	17	SWSW
Brookston Loops	Existing Trails or Roadways - Improvements Needed	51	18	18	SESE
Brookston Loops	Existing Trails or Roadways - Improvements Needed	51	18	19	NENE
Brookston Loops	Existing Trails or Roadways - Improvements Needed	51	18	19	NENW
Brookston Loops	Existing Trails or Roadways - Improvements Needed	51	18	19	NWNE
Brookston Loops	Existing Trails or Roadways - Improvements Needed	51	18	19	NWSE
Brookston Loops	Existing Trails or Roadways - Improvements Needed	51	18	19	SESE
Brookston Loops	Existing Trails or Roadways - Improvements Needed	51	18	19	SESW
Brookston Loops	Existing Trails or Roadways - Improvements Needed	51	18	19	SWNE
Brookston Loops	Existing Trails or Roadways - Improvements Needed	51	18	19	SWSE
Brookston Loops	Existing Trails or Roadways - Improvements Needed	51	18	19	Gov. Lot 1
Brookston Loops	Existing Trails or Roadways - Improvements Needed	51	18	19	Gov. Lot 4
Brookston Loops	Existing Trails or Roadways - Improvements Needed	51	18	20	NENE
Brookston Loops	Existing Trails or Roadways - Improvements Needed	51	18	20	NESE
Brookston Loops	Existing Trails or Roadways - Improvements Needed	51	18	20	SENE
Brookston Loops	Existing Trails or Roadways - Improvements Needed	51	18	20	SESE
Brookston Loops	Existing Trails or Roadways - Improvements Needed	51	18	20	SESW
Brookston Loops	Existing Trails or Roadways - Improvements Needed	51	18	20	SWSE
Brookston Loops	Existing Trails or Roadways - Improvements Needed	51	18	20	SWSW
Brookston Loops	Existing Trails or Roadways - Improvements Needed	51	18	21	NENW
Brookston Loops	Existing Trails or Roadways - Improvements Needed	51	18	21	NESW
Brookston Loops	Existing Trails or Roadways - Improvements Needed	51	18	21	NWNE
Brookston Loops	Existing Trails or Roadways - Improvements Needed	51	18	21	NWNW
Brookston Loops	Existing Trails or Roadways - Improvements Needed	51	18	21	NWSW
Brookston Loops	Existing Trails or Roadways - Improvements Needed	51	18	21	SENW
Brookston Loops	Existing Trails or Roadways - Improvements Needed	51	18	21	SESW
Brookston Loops	Existing Trails or Roadways - Improvements Needed	51	18	21	SWNE
Brookston Loops	Existing Trails or Roadways - Improvements Needed	51	18	21	SWNW
Brookston Loops	Existing Trails or Roadways - Improvements Needed	51	18	21	SWSW
Brookston Loops	Existing Trails or Roadways - Improvements Needed	51	18	25	NESE
Brookston Loops	Existing Trails or Roadways - Improvements Needed	51	18	25	SESE
Brookston Loops	Existing Trails or Roadways - Improvements Needed	51	18	27	SENW
Brookston Loops	Existing Trails or Roadways - Improvements Needed	51	18	27	SWNW
Brookston Loops	Existing Trails or Roadways - Improvements Needed	51	18	27	Gov. Lot 2
Brookston Loops	Existing Trails or Roadways - Improvements Needed	51	18	27	Gov. Lot 3
Brookston Loops	Existing Trails or Roadways - Improvements Needed	51	18	28	NENW
Brookston Loops	Existing Trails or Roadways - Improvements Needed	51	18	28	SENE
Brookston Loops	Existing Trails or Roadways - Improvements Needed	51	18	28	Gov. Lot 2
Brookston Loops	Existing Trails or Roadways - Improvements Needed	51	18	29	NWNW
Brookston Loops	Existing Trails or Roadways - Improvements Needed	51	18	30	NENE
Brookston Loops	Existing Trails or Roadways - Improvements Needed	51	18	30	NENW

Attachment A2: Public Land Survey 1/4, 1/4 Section, Township, Range

Trail Group	Trail Route Category	Township	Range	Section	QQ ID
Brookston Loops	Existing Trails or Roadways - Improvements Needed	51	18	30	Gov. Lot 1
Brookston Loops	Existing Trails or Roadways - Improvements Needed	51	19	12	SESE
Brookston Loops	Existing Trails or Roadways - Improvements Needed	51	19	12	SESW
Brookston Loops	Existing Trails or Roadways - Improvements Needed	51	19	12	SWSW
Brookston Loops	Existing Trails or Roadways - Improvements Needed	51	19	13	NESW
Brookston Loops	Existing Trails or Roadways - Improvements Needed	51	19	13	NWNW
Brookston Loops	Existing Trails or Roadways - Improvements Needed	51	19	13	NWSE
Brookston Loops	Existing Trails or Roadways - Improvements Needed	51	19	13	NWSW
Brookston Loops	Existing Trails or Roadways - Improvements Needed	51	19	13	SESE
Brookston Loops	Existing Trails or Roadways - Improvements Needed	51	19	13	SWNW
Brookston Loops	Existing Trails or Roadways - Improvements Needed	51	19	13	SWSE
Brookston Loops	Existing Trails or Roadways - Improvements Needed	51	19	14	NENE
Brookston Loops	Existing Trails or Roadways - Improvements Needed	51	19	14	NESW
Brookston Loops	Existing Trails or Roadways - Improvements Needed	51	19	14	NWNE
Brookston Loops	Existing Trails or Roadways - Improvements Needed	51	19	14	NWSW
Brookston Loops	Existing Trails or Roadways - Improvements Needed	51	19	14	SENE
Brookston Loops	Existing Trails or Roadways - Improvements Needed	51	19	14	SENW
Brookston Loops	Existing Trails or Roadways - Improvements Needed	51	19	14	SESW
Brookston Loops	Existing Trails or Roadways - Improvements Needed	51	19	14	SWNE
Brookston Loops	Existing Trails or Roadways - Improvements Needed	51	19	14	SWSW
Brookston Loops	Existing Trails or Roadways - Improvements Needed	51	19	22	NENE
Brookston Loops	Existing Trails or Roadways - Improvements Needed	51	19	22	SESE
Brookston Loops	Existing Trails or Roadways - Improvements Needed	51	19	23	NESE
Brookston Loops	Existing Trails or Roadways - Improvements Needed	51	19	23	NWNW
Brookston Loops	Existing Trails or Roadways - Improvements Needed	51	19	23	NWSW
Brookston Loops	Existing Trails or Roadways - Improvements Needed	51	19	23	SENE
Brookston Loops	Existing Trails or Roadways - Improvements Needed	51	19	23	SESE
Brookston Loops	Existing Trails or Roadways - Improvements Needed	51	19	23	SESW
Brookston Loops	Existing Trails or Roadways - Improvements Needed	51	19	23	SWNW
Brookston Loops	Existing Trails or Roadways - Improvements Needed	51	19	23	SWSE
Brookston Loops	Existing Trails or Roadways - Improvements Needed	51	19	23	SWSW
Brookston Loops	Existing Trails or Roadways - Improvements Needed	51	19	24	NENE
Brookston Loops	Existing Trails or Roadways - Improvements Needed	51	19	24	NENW
Brookston Loops	Existing Trails or Roadways - Improvements Needed	51	19	24	NWNE
Brookston Loops	Existing Trails or Roadways - Improvements Needed	51	19	24	SENW
Brookston Loops	Existing Trails or Roadways - Improvements Needed	51	19	24	SESW
Brookston Loops	Existing Trails or Roadways - Improvements Needed	51	19	24	SWNW
Brookston Loops	Existing Trails or Roadways - Improvements Needed	51	19	24	SWSW
Brookston Loops	Existing Trails or Roadways - Improvements Needed	51	19	25	NENE
Brookston Loops	Existing Trails or Roadways - Improvements Needed	51	19	25	NENW
Brookston Loops	Existing Trails or Roadways - Improvements Needed	51	19	25	NWNE
Brookston Loops	Existing Trails or Roadways - Improvements Needed	51	19	27	Gov. Lot 1
Brookston Loops	Proposed Route - New Construction Proposed for ATV Use	51	17	19	NWNE
Brookston Loops	Proposed Route - New Construction Proposed for ATV Use	51	18	7	NESE
Brookston Loops	Proposed Route - New Construction Proposed for ATV Use	51	18	7	NWSE
Brookston Loops	Proposed Route - New Construction Proposed for ATV Use	51	18	7	SENE
Brookston Loops	Proposed Route - New Construction Proposed for ATV Use	51	18	8	NENW
Brookston Loops	Proposed Route - New Construction Proposed for ATV Use	51	18	8	SENW
Brookston Loops	Proposed Route - New Construction Proposed for ATV Use	51	18	8	SWNW
Brookston Loops	Proposed Route - New Construction Proposed for ATV Use	51	18	28	SENE
Brookston Loops	Proposed Route - New Construction Proposed for ATV Use	51	18	28	Gov. Lot 2
Brookston Loops	Proposed Route - New Construction Proposed for ATV Use	51	18	28	Gov. Lot 3

Attachment A2: Public Land Survey 1/4, 1/4 Section, Township, Range

Trail Group	Trail Route Category	Township	Range	Section	QQ ID
Brookston Loops	Proposed Route - New Construction Proposed for ATV Use	51	19	12	SESE
Brookston Loops	Proposed Route - New Construction Proposed for ATV Use	51	19	12	SESW
Brookston Loops	Proposed Route - New Construction Proposed for ATV Use	51	19	12	SWSE
Canyon to Cotton	Existing Roadways Open to ATV Traffic - No Improvements Needed	53	15	2	NESW
Canyon to Cotton	Existing Roadways Open to ATV Traffic - No Improvements Needed	53	15	2	NWNW
Canyon to Cotton	Existing Roadways Open to ATV Traffic - No Improvements Needed	53	15	2	NWSE
Canyon to Cotton	Existing Roadways Open to ATV Traffic - No Improvements Needed	53	15	2	SENW
Canyon to Cotton	Existing Roadways Open to ATV Traffic - No Improvements Needed	53	15	2	SWNW
Canyon to Cotton	Existing Roadways Open to ATV Traffic - No Improvements Needed	53	15	2	SWSE
Canyon to Cotton	Existing Roadways Open to ATV Traffic - No Improvements Needed	53	15	3	NENE
Canyon to Cotton	Existing Roadways Open to ATV Traffic - No Improvements Needed	53	15	11	NENW
Canyon to Cotton	Existing Roadways Open to ATV Traffic - No Improvements Needed	53	15	11	NWNE
Canyon to Cotton	Existing Roadways Open to ATV Traffic - No Improvements Needed	53	15	11	SWNE
Canyon to Cotton	Existing Trails or Roadways - Improvements Needed	52	16	2	NWSW
Canyon to Cotton	Existing Trails or Roadways - Improvements Needed	52	16	2	SWNW
Canyon to Cotton	Existing Trails or Roadways - Improvements Needed	52	16	2	SWSW
Canyon to Cotton	Existing Trails or Roadways - Improvements Needed	52	16	2	Gov. Lot 4
Canyon to Cotton	Existing Trails or Roadways - Improvements Needed	52	16	11	NESW
Canyon to Cotton	Existing Trails or Roadways - Improvements Needed	52	16	11	NWNW
Canyon to Cotton	Existing Trails or Roadways - Improvements Needed	52	16	11	NWSW
Canyon to Cotton	Existing Trails or Roadways - Improvements Needed	52	16	11	SESW
Canyon to Cotton	Existing Trails or Roadways - Improvements Needed	52	16	11	SWNW
Canyon to Cotton	Existing Trails or Roadways - Improvements Needed	52	16	11	SWSE
Canyon to Cotton	Existing Trails or Roadways - Improvements Needed	52	16	14	NWNE
Canyon to Cotton	Existing Trails or Roadways - Improvements Needed	52	16	14	NWSE
Canyon to Cotton	Existing Trails or Roadways - Improvements Needed	52	16	14	SWNE
Canyon to Cotton	Existing Trails or Roadways - Improvements Needed	53	14	7	NWSW
Canyon to Cotton	Existing Trails or Roadways - Improvements Needed	53	14	7	SWNW
Canyon to Cotton	Existing Trails or Roadways - Improvements Needed	53	14	7	SWSW
Canyon to Cotton	Existing Trails or Roadways - Improvements Needed	53	14	18	NWNW
Canyon to Cotton	Existing Trails or Roadways - Improvements Needed	53	15	1	NENE
Canyon to Cotton	Existing Trails or Roadways - Improvements Needed	53	15	1	NESE
Canyon to Cotton	Existing Trails or Roadways - Improvements Needed	53	15	1	SENE
Canyon to Cotton	Existing Trails or Roadways - Improvements Needed	53	15	1	SESE
Canyon to Cotton	Existing Trails or Roadways - Improvements Needed	53	15	3	SESE
Canyon to Cotton	Existing Trails or Roadways - Improvements Needed	53	15	3	SESW
Canyon to Cotton	Existing Trails or Roadways - Improvements Needed	53	15	3	SWSE
Canyon to Cotton	Existing Trails or Roadways - Improvements Needed	53	15	4	SESE
Canyon to Cotton	Existing Trails or Roadways - Improvements Needed	53	15	4	SESW
Canyon to Cotton	Existing Trails or Roadways - Improvements Needed	53	15	4	SWSE
Canyon to Cotton	Existing Trails or Roadways - Improvements Needed	53	15	5	NWSW
Canyon to Cotton	Existing Trails or Roadways - Improvements Needed	53	15	5	SWSW
Canyon to Cotton	Existing Trails or Roadways - Improvements Needed	53	15	7	NESE
Canyon to Cotton	Existing Trails or Roadways - Improvements Needed	53	15	7	SESE
Canyon to Cotton	Existing Trails or Roadways - Improvements Needed	53	15	7	SWSE
Canyon to Cotton	Existing Trails or Roadways - Improvements Needed	53	15	8	NENE
Canyon to Cotton	Existing Trails or Roadways - Improvements Needed	53	15	8	NESE
Canyon to Cotton	Existing Trails or Roadways - Improvements Needed	53	15	8	NESW
Canyon to Cotton	Existing Trails or Roadways - Improvements Needed	53	15	8	NWNW
Canyon to Cotton	Existing Trails or Roadways - Improvements Needed	53	15	8	NWSW
Canyon to Cotton	Existing Trails or Roadways - Improvements Needed	53	15	8	SENE
Canyon to Cotton	Existing Trails or Roadways - Improvements Needed	53	15	8	SENW

Attachment A2: Public Land Survey 1/4, 1/4 Section, Township, Range

Trail Group	Trail Route Category	Township	Range	Section	QQ ID
Canyon to Cotton	Existing Trails or Roadways - Improvements Needed	53	15	8	SESE
Canyon to Cotton	Existing Trails or Roadways - Improvements Needed	53	15	8	SESW
Canyon to Cotton	Existing Trails or Roadways - Improvements Needed	53	15	8	SWNE
Canyon to Cotton	Existing Trails or Roadways - Improvements Needed	53	15	8	SWNW
Canyon to Cotton	Existing Trails or Roadways - Improvements Needed	53	15	8	SWSE
Canyon to Cotton	Existing Trails or Roadways - Improvements Needed	53	15	8	SWSW
Canyon to Cotton	Existing Trails or Roadways - Improvements Needed	53	15	9	NENE
Canyon to Cotton	Existing Trails or Roadways - Improvements Needed	53	15	9	NENW
Canyon to Cotton	Existing Trails or Roadways - Improvements Needed	53	15	9	NESW
Canyon to Cotton	Existing Trails or Roadways - Improvements Needed	53	15	9	NWNW
Canyon to Cotton	Existing Trails or Roadways - Improvements Needed	53	15	9	NWSW
Canyon to Cotton	Existing Trails or Roadways - Improvements Needed	53	15	9	SENE
Canyon to Cotton	Existing Trails or Roadways - Improvements Needed	53	15	9	SENW
Canyon to Cotton	Existing Trails or Roadways - Improvements Needed	53	15	9	SWNE
Canyon to Cotton	Existing Trails or Roadways - Improvements Needed	53	15	10	NENW
Canyon to Cotton	Existing Trails or Roadways - Improvements Needed	53	15	10	NESW
Canyon to Cotton	Existing Trails or Roadways - Improvements Needed	53	15	10	NWNE
Canyon to Cotton	Existing Trails or Roadways - Improvements Needed	53	15	10	NWNW
Canyon to Cotton	Existing Trails or Roadways - Improvements Needed	53	15	10	NWSE
Canyon to Cotton	Existing Trails or Roadways - Improvements Needed	53	15	10	SENE
Canyon to Cotton	Existing Trails or Roadways - Improvements Needed	53	15	10	SESW
Canyon to Cotton	Existing Trails or Roadways - Improvements Needed	53	15	10	SWNE
Canyon to Cotton	Existing Trails or Roadways - Improvements Needed	53	15	10	SWSW
Canyon to Cotton	Existing Trails or Roadways - Improvements Needed	53	15	11	NENE
Canyon to Cotton	Existing Trails or Roadways - Improvements Needed	53	15	11	NWNE
Canyon to Cotton	Existing Trails or Roadways - Improvements Needed	53	15	11	NWSE
Canyon to Cotton	Existing Trails or Roadways - Improvements Needed	53	15	11	SENE
Canyon to Cotton	Existing Trails or Roadways - Improvements Needed	53	15	11	SWNE
Canyon to Cotton	Existing Trails or Roadways - Improvements Needed	53	15	11	SWSE
Canyon to Cotton	Existing Trails or Roadways - Improvements Needed	53	15	12	NENE
Canyon to Cotton	Existing Trails or Roadways - Improvements Needed	53	15	12	SENE
Canyon to Cotton	Existing Trails or Roadways - Improvements Needed	53	15	13	NENE
Canyon to Cotton	Existing Trails or Roadways - Improvements Needed	53	15	13	NENW
Canyon to Cotton	Existing Trails or Roadways - Improvements Needed	53	15	13	NWNE
Canyon to Cotton	Existing Trails or Roadways - Improvements Needed	53	15	13	SWNW
Canyon to Cotton	Existing Trails or Roadways - Improvements Needed	53	15	13	Gov. Lot 1
Canyon to Cotton	Existing Trails or Roadways - Improvements Needed	53	15	13	Gov. Lot 2
Canyon to Cotton	Existing Trails or Roadways - Improvements Needed	53	15	14	NWNE
Canyon to Cotton	Existing Trails or Roadways - Improvements Needed	53	15	14	NWNW
Canyon to Cotton	Existing Trails or Roadways - Improvements Needed	53	15	14	NWSE
Canyon to Cotton	Existing Trails or Roadways - Improvements Needed	53	15	14	SENW
Canyon to Cotton	Existing Trails or Roadways - Improvements Needed	53	15	14	SWNE
Canyon to Cotton	Existing Trails or Roadways - Improvements Needed	53	15	14	SWNW
Canyon to Cotton	Existing Trails or Roadways - Improvements Needed	53	15	14	Gov. Lot 1
Canyon to Cotton	Existing Trails or Roadways - Improvements Needed	53	15	15	NENE
Canyon to Cotton	Existing Trails or Roadways - Improvements Needed	53	15	15	NESW
Canyon to Cotton	Existing Trails or Roadways - Improvements Needed	53	15	15	NWNW
Canyon to Cotton	Existing Trails or Roadways - Improvements Needed	53	15	15	NWSE
Canyon to Cotton	Existing Trails or Roadways - Improvements Needed	53	15	15	NWSW
Canyon to Cotton	Existing Trails or Roadways - Improvements Needed	53	15	15	SENE
Canyon to Cotton	Existing Trails or Roadways - Improvements Needed	53	15	15	SENW
Canyon to Cotton	Existing Trails or Roadways - Improvements Needed	53	15	15	SESW

Attachment A2: Public Land Survey 1/4, 1/4 Section, Township, Range

Trail Group	Trail Route Category	Township	Range	Section	QQ ID
Canyon to Cotton	Existing Trails or Roadways - Improvements Needed	53	15	15	SWNE
Canyon to Cotton	Existing Trails or Roadways - Improvements Needed	53	15	15	SWNW
Canyon to Cotton	Existing Trails or Roadways - Improvements Needed	53	15	15	SWSE
Canyon to Cotton	Existing Trails or Roadways - Improvements Needed	53	15	16	NESE
Canyon to Cotton	Existing Trails or Roadways - Improvements Needed	53	15	16	NESW
Canyon to Cotton	Existing Trails or Roadways - Improvements Needed	53	15	16	NWSE
Canyon to Cotton	Existing Trails or Roadways - Improvements Needed	53	15	16	NWSW
Canyon to Cotton	Existing Trails or Roadways - Improvements Needed	53	15	16	SENE
Canyon to Cotton	Existing Trails or Roadways - Improvements Needed	53	15	16	SENW
Canyon to Cotton	Existing Trails or Roadways - Improvements Needed	53	15	16	SWNE
Canyon to Cotton	Existing Trails or Roadways - Improvements Needed	53	15	16	SWNW
Canyon to Cotton	Existing Trails or Roadways - Improvements Needed	53	15	17	NESE
Canyon to Cotton	Existing Trails or Roadways - Improvements Needed	53	15	17	SESE
Canyon to Cotton	Existing Trails or Roadways - Improvements Needed	53	15	17	SWSE
Canyon to Cotton	Existing Trails or Roadways - Improvements Needed	53	15	18	NESW
Canyon to Cotton	Existing Trails or Roadways - Improvements Needed	53	15	18	NWNE
Canyon to Cotton	Existing Trails or Roadways - Improvements Needed	53	15	18	NWSW
Canyon to Cotton	Existing Trails or Roadways - Improvements Needed	53	15	18	SENW
Canyon to Cotton	Existing Trails or Roadways - Improvements Needed	53	15	18	SESW
Canyon to Cotton	Existing Trails or Roadways - Improvements Needed	53	15	18	SWNE
Canyon to Cotton	Existing Trails or Roadways - Improvements Needed	53	15	18	SWNW
Canyon to Cotton	Existing Trails or Roadways - Improvements Needed	53	15	18	SWSW
Canyon to Cotton	Existing Trails or Roadways - Improvements Needed	53	15	20	NENW
Canyon to Cotton	Existing Trails or Roadways - Improvements Needed	53	15	20	NWNE
Canyon to Cotton	Existing Trails or Roadways - Improvements Needed	53	15	20	NWNW
Canyon to Cotton	Existing Trails or Roadways - Improvements Needed	53	15	20	NWSW
Canyon to Cotton	Existing Trails or Roadways - Improvements Needed	53	15	20	SWNW
Canyon to Cotton	Existing Trails or Roadways - Improvements Needed	53	15	20	SWSW
Canyon to Cotton	Existing Trails or Roadways - Improvements Needed	53	15	21	NENE
Canyon to Cotton	Existing Trails or Roadways - Improvements Needed	53	15	21	NESW
Canyon to Cotton	Existing Trails or Roadways - Improvements Needed	53	15	21	NWSE
Canyon to Cotton	Existing Trails or Roadways - Improvements Needed	53	15	21	SENE
Canyon to Cotton	Existing Trails or Roadways - Improvements Needed	53	15	21	SESW
Canyon to Cotton	Existing Trails or Roadways - Improvements Needed	53	15	21	SWNE
Canyon to Cotton	Existing Trails or Roadways - Improvements Needed	53	15	21	SWSW
Canyon to Cotton	Existing Trails or Roadways - Improvements Needed	53	15	22	NENW
Canyon to Cotton	Existing Trails or Roadways - Improvements Needed	53	15	22	NWNW
Canyon to Cotton	Existing Trails or Roadways - Improvements Needed	53	15	28	NWNW
Canyon to Cotton	Existing Trails or Roadways - Improvements Needed	53	15	29	NENE
Canyon to Cotton	Existing Trails or Roadways - Improvements Needed	53	15	29	NESW
Canyon to Cotton	Existing Trails or Roadways - Improvements Needed	53	15	29	NWNE
Canyon to Cotton	Existing Trails or Roadways - Improvements Needed	53	15	29	NWNW
Canyon to Cotton	Existing Trails or Roadways - Improvements Needed	53	15	29	NWSW
Canyon to Cotton	Existing Trails or Roadways - Improvements Needed	53	15	29	SENW
Canyon to Cotton	Existing Trails or Roadways - Improvements Needed	53	15	29	SWNE
Canyon to Cotton	Existing Trails or Roadways - Improvements Needed	53	15	29	SWSW
Canyon to Cotton	Existing Trails or Roadways - Improvements Needed	53	15	30	NENE
Canyon to Cotton	Existing Trails or Roadways - Improvements Needed	53	15	30	NESE
Canyon to Cotton	Existing Trails or Roadways - Improvements Needed	53	15	30	SENE
Canyon to Cotton	Existing Trails or Roadways - Improvements Needed	53	15	30	SESE
Canyon to Cotton	Existing Trails or Roadways - Improvements Needed	53	15	30	SESW
Canyon to Cotton	Existing Trails or Roadways - Improvements Needed	53	15	30	SWSE

Attachment A2: Public Land Survey 1/4, 1/4 Section, Township, Range

Trail Group	Trail Route Category	Township	Range	Section	QQ ID
Canyon to Cotton	Existing Trails or Roadways - Improvements Needed	53	15	30	SWSW
Canyon to Cotton	Existing Trails or Roadways - Improvements Needed	53	16	3	NESW
Canyon to Cotton	Existing Trails or Roadways - Improvements Needed	53	16	3	SENW
Canyon to Cotton	Existing Trails or Roadways - Improvements Needed	53	16	3	SESW
Canyon to Cotton	Existing Trails or Roadways - Improvements Needed	53	16	3	SWSW
Canyon to Cotton	Existing Trails or Roadways - Improvements Needed	53	16	9	NENE
Canyon to Cotton	Existing Trails or Roadways - Improvements Needed	53	16	9	NWSE
Canyon to Cotton	Existing Trails or Roadways - Improvements Needed	53	16	9	SENE
Canyon to Cotton	Existing Trails or Roadways - Improvements Needed	53	16	9	SESE
Canyon to Cotton	Existing Trails or Roadways - Improvements Needed	53	16	9	SWNE
Canyon to Cotton	Existing Trails or Roadways - Improvements Needed	53	16	9	SWSE
Canyon to Cotton	Existing Trails or Roadways - Improvements Needed	53	16	10	NWNW
Canyon to Cotton	Existing Trails or Roadways - Improvements Needed	53	16	10	SWSW
Canyon to Cotton	Existing Trails or Roadways - Improvements Needed	53	16	13	NESE
Canyon to Cotton	Existing Trails or Roadways - Improvements Needed	53	16	13	NWSE
Canyon to Cotton	Existing Trails or Roadways - Improvements Needed	53	16	13	SESE
Canyon to Cotton	Existing Trails or Roadways - Improvements Needed	53	16	13	SESW
Canyon to Cotton	Existing Trails or Roadways - Improvements Needed	53	16	13	SWSE
Canyon to Cotton	Existing Trails or Roadways - Improvements Needed	53	16	15	NWNW
Canyon to Cotton	Existing Trails or Roadways - Improvements Needed	53	16	15	NWSW
Canyon to Cotton	Existing Trails or Roadways - Improvements Needed	53	16	15	SESW
Canyon to Cotton	Existing Trails or Roadways - Improvements Needed	53	16	15	SWNW
Canyon to Cotton	Existing Trails or Roadways - Improvements Needed	53	16	15	SWSE
Canyon to Cotton	Existing Trails or Roadways - Improvements Needed	53	16	15	SWSW
Canyon to Cotton	Existing Trails or Roadways - Improvements Needed	53	16	20	SESE
Canyon to Cotton	Existing Trails or Roadways - Improvements Needed	53	16	21	NENE
Canyon to Cotton	Existing Trails or Roadways - Improvements Needed	53	16	21	NESW
Canyon to Cotton	Existing Trails or Roadways - Improvements Needed	53	16	21	NWSE
Canyon to Cotton	Existing Trails or Roadways - Improvements Needed	53	16	21	NWSW
Canyon to Cotton	Existing Trails or Roadways - Improvements Needed	53	16	21	SENE
Canyon to Cotton	Existing Trails or Roadways - Improvements Needed	53	16	21	SWNE
Canyon to Cotton	Existing Trails or Roadways - Improvements Needed	53	16	21	SWSW
Canyon to Cotton	Existing Trails or Roadways - Improvements Needed	53	16	22	NWNE
Canyon to Cotton	Existing Trails or Roadways - Improvements Needed	53	16	22	NWNW
Canyon to Cotton	Existing Trails or Roadways - Improvements Needed	53	16	22	NWSE
Canyon to Cotton	Existing Trails or Roadways - Improvements Needed	53	16	22	SESE
Canyon to Cotton	Existing Trails or Roadways - Improvements Needed	53	16	22	SWNE
Canyon to Cotton	Existing Trails or Roadways - Improvements Needed	53	16	22	SWSE
Canyon to Cotton	Existing Trails or Roadways - Improvements Needed	53	16	23	NESW
Canyon to Cotton	Existing Trails or Roadways - Improvements Needed	53	16	23	NWSE
Canyon to Cotton	Existing Trails or Roadways - Improvements Needed	53	16	23	SENE
Canyon to Cotton	Existing Trails or Roadways - Improvements Needed	53	16	23	SESE
Canyon to Cotton	Existing Trails or Roadways - Improvements Needed	53	16	23	SESW
Canyon to Cotton	Existing Trails or Roadways - Improvements Needed	53	16	23	SWNE
Canyon to Cotton	Existing Trails or Roadways - Improvements Needed	53	16	23	SWSE
Canyon to Cotton	Existing Trails or Roadways - Improvements Needed	53	16	23	SWSW
Canyon to Cotton	Existing Trails or Roadways - Improvements Needed	53	16	24	NENE
Canyon to Cotton	Existing Trails or Roadways - Improvements Needed	53	16	24	NENW
Canyon to Cotton	Existing Trails or Roadways - Improvements Needed	53	16	24	NESW
Canyon to Cotton	Existing Trails or Roadways - Improvements Needed	53	16	24	NWNE
Canyon to Cotton	Existing Trails or Roadways - Improvements Needed	53	16	24	NWNW
Canyon to Cotton	Existing Trails or Roadways - Improvements Needed	53	16	24	NWSE

Attachment A2: Public Land Survey 1/4, 1/4 Section, Township, Range

Trail Group	Trail Route Category	Township	Range	Section	QQ ID
Canyon to Cotton	Existing Trails or Roadways - Improvements Needed	53	16	24	NWSW
Canyon to Cotton	Existing Trails or Roadways - Improvements Needed	53	16	24	SESW
Canyon to Cotton	Existing Trails or Roadways - Improvements Needed	53	16	24	SWNE
Canyon to Cotton	Existing Trails or Roadways - Improvements Needed	53	16	24	SWNW
Canyon to Cotton	Existing Trails or Roadways - Improvements Needed	53	16	24	SWSW
Canyon to Cotton	Existing Trails or Roadways - Improvements Needed	53	16	25	SESE
Canyon to Cotton	Existing Trails or Roadways - Improvements Needed	53	16	25	SESW
Canyon to Cotton	Existing Trails or Roadways - Improvements Needed	53	16	25	SWSE
Canyon to Cotton	Existing Trails or Roadways - Improvements Needed	53	16	25	SWSW
Canyon to Cotton	Existing Trails or Roadways - Improvements Needed	53	16	26	NENW
Canyon to Cotton	Existing Trails or Roadways - Improvements Needed	53	16	26	NWNE
Canyon to Cotton	Existing Trails or Roadways - Improvements Needed	53	16	26	NWNW
Canyon to Cotton	Existing Trails or Roadways - Improvements Needed	53	16	26	SWNW
Canyon to Cotton	Existing Trails or Roadways - Improvements Needed	53	16	27	NENE
Canyon to Cotton	Existing Trails or Roadways - Improvements Needed	53	16	27	NESE
Canyon to Cotton	Existing Trails or Roadways - Improvements Needed	53	16	27	NESW
Canyon to Cotton	Existing Trails or Roadways - Improvements Needed	53	16	27	NWNE
Canyon to Cotton	Existing Trails or Roadways - Improvements Needed	53	16	27	NWSE
Canyon to Cotton	Existing Trails or Roadways - Improvements Needed	53	16	27	SENE
Canyon to Cotton	Existing Trails or Roadways - Improvements Needed	53	16	27	SESE
Canyon to Cotton	Existing Trails or Roadways - Improvements Needed	53	16	27	SESW
Canyon to Cotton	Existing Trails or Roadways - Improvements Needed	53	16	27	SWNE
Canyon to Cotton	Existing Trails or Roadways - Improvements Needed	53	16	29	NENE
Canyon to Cotton	Existing Trails or Roadways - Improvements Needed	53	16	29	NENW
Canyon to Cotton	Existing Trails or Roadways - Improvements Needed	53	16	29	NESW
Canyon to Cotton	Existing Trails or Roadways - Improvements Needed	53	16	29	NWNE
Canyon to Cotton	Existing Trails or Roadways - Improvements Needed	53	16	29	SENW
Canyon to Cotton	Existing Trails or Roadways - Improvements Needed	53	16	29	SESW
Canyon to Cotton	Existing Trails or Roadways - Improvements Needed	53	16	32	NENW
Canyon to Cotton	Existing Trails or Roadways - Improvements Needed	53	16	34	NENE
Canyon to Cotton	Existing Trails or Roadways - Improvements Needed	53	16	34	NESE
Canyon to Cotton	Existing Trails or Roadways - Improvements Needed	53	16	34	SENE
Canyon to Cotton	Existing Trails or Roadways - Improvements Needed	53	16	35	NENE
Canyon to Cotton	Existing Trails or Roadways - Improvements Needed	53	16	35	NENW
Canyon to Cotton	Existing Trails or Roadways - Improvements Needed	53	16	35	NWNE
Canyon to Cotton	Existing Trails or Roadways - Improvements Needed	53	16	35	NWNW
Canyon to Cotton	Existing Trails or Roadways - Improvements Needed	53	16	35	NWSW
Canyon to Cotton	Existing Trails or Roadways - Improvements Needed	53	16	35	SESW
Canyon to Cotton	Existing Trails or Roadways - Improvements Needed	53	16	35	SWNW
Canyon to Cotton	Existing Trails or Roadways - Improvements Needed	53	16	35	SWSW
Canyon to Cotton	Existing Trails or Roadways - Improvements Needed	53	16	36	NWNW
Canyon to Cotton	Proposed Route - New Construction Proposed for ATV Use	53	15	2	NWSW
Canyon to Cotton	Proposed Route - New Construction Proposed for ATV Use	53	15	2	SESE
Canyon to Cotton	Proposed Route - New Construction Proposed for ATV Use	53	15	2	SWNW
Canyon to Cotton	Proposed Route - New Construction Proposed for ATV Use	53	15	2	SWSE
Canyon to Cotton	Proposed Route - New Construction Proposed for ATV Use	53	15	2	SWSW
Canyon to Cotton	Proposed Route - New Construction Proposed for ATV Use	53	15	3	SESE
Canyon to Cotton	Proposed Route - New Construction Proposed for ATV Use	53	15	10	NENE
Canyon to Cotton	Proposed Route - New Construction Proposed for ATV Use	53	15	10	NESW
Canyon to Cotton	Proposed Route - New Construction Proposed for ATV Use	53	15	10	NWNW
Canyon to Cotton	Proposed Route - New Construction Proposed for ATV Use	53	15	10	SENE
Canyon to Cotton	Proposed Route - New Construction Proposed for ATV Use	53	15	10	SENW

Attachment A2: Public Land Survey 1/4, 1/4 Section, Township, Range

Trail Group	Trail Route Category	Township	Range	Section	QQ ID
Canyon to Cotton	Proposed Route - New Construction Proposed for ATV Use	53	15	10	SWNW
Canyon to Cotton	Proposed Route - New Construction Proposed for ATV Use	53	15	11	NENE
Canyon to Cotton	Proposed Route - New Construction Proposed for ATV Use	53	15	11	NESE
Canyon to Cotton	Proposed Route - New Construction Proposed for ATV Use	53	15	11	SENE
Canyon to Cotton	Proposed Route - New Construction Proposed for ATV Use	53	15	11	SESE
Canyon to Cotton	Proposed Route - New Construction Proposed for ATV Use	53	15	11	SWSE
Canyon to Cotton	Proposed Route - New Construction Proposed for ATV Use	53	15	14	NWNE
Cross Roads Connector	Existing Roadways Open to ATV Traffic - No Improvements Needed	50	17	1	Gov. Lot 4
Cross Roads Connector	Existing Roadways Open to ATV Traffic - No Improvements Needed	50	17	2	Gov. Lot 1
Cross Roads Connector	Existing Roadways Open to ATV Traffic - No Improvements Needed	50	17	2	Gov. Lot 2
Cross Roads Connector	Existing Trails or Roadways - Improvements Needed	50	17	1	SWNW
Cross Roads Connector	Existing Trails or Roadways - Improvements Needed	50	17	2	NESE
Cross Roads Connector	Existing Trails or Roadways - Improvements Needed	50	17	2	NWSE
Cross Roads Connector	Existing Trails or Roadways - Improvements Needed	50	17	2	SENE
Cross Roads Connector	Existing Trails or Roadways - Improvements Needed	50	17	2	SENW
Cross Roads Connector	Existing Trails or Roadways - Improvements Needed	50	17	2	SWNE
Cross Roads Connector	Existing Trails or Roadways - Improvements Needed	50	17	2	Gov. Lot 2
Cross Roads Connector	Existing Trails or Roadways - Improvements Needed	50	17	2	Gov. Lot 3
Cross Roads Connector	Existing Trails or Roadways - Improvements Needed	51	17	35	SESW
Cross Roads Connector	Existing Trails or Roadways - Improvements Needed	51	17	35	SWSE
Floodwood Loop	Existing Roadways Open to ATV Traffic - No Improvements Needed	51	20	2	SWSW
Floodwood Loop	Existing Roadways Open to ATV Traffic - No Improvements Needed	51	20	3	SESE
Floodwood Loop	Existing Roadways Open to ATV Traffic - No Improvements Needed	51	20	3	SESW
Floodwood Loop	Existing Roadways Open to ATV Traffic - No Improvements Needed	51	20	3	SWSE
Floodwood Loop	Existing Roadways Open to ATV Traffic - No Improvements Needed	51	20	3	SWSW
Floodwood Loop	Existing Roadways Open to ATV Traffic - No Improvements Needed	51	20	4	SESE
Floodwood Loop	Existing Roadways Open to ATV Traffic - No Improvements Needed	51	20	4	SESW
Floodwood Loop	Existing Roadways Open to ATV Traffic - No Improvements Needed	51	20	4	SWSE
Floodwood Loop	Existing Roadways Open to ATV Traffic - No Improvements Needed	51	20	5	NWSE
Floodwood Loop	Existing Roadways Open to ATV Traffic - No Improvements Needed	51	20	5	SESE
Floodwood Loop	Existing Roadways Open to ATV Traffic - No Improvements Needed	51	20	5	SWSE
Floodwood Loop	Existing Roadways Open to ATV Traffic - No Improvements Needed	51	20	5	Gov. Lot 8
Floodwood Loop	Existing Roadways Open to ATV Traffic - No Improvements Needed	51	20	5	Gov. Lot 9
Floodwood Loop	Existing Roadways Open to ATV Traffic - No Improvements Needed	51	20	5	Gov. Lot 11
Floodwood Loop	Existing Roadways Open to ATV Traffic - No Improvements Needed	51	20	5	Gov. Lot 99
Floodwood Loop	Existing Roadways Open to ATV Traffic - No Improvements Needed	51	20	6	SESE
Floodwood Loop	Existing Roadways Open to ATV Traffic - No Improvements Needed	51	20	7	NENE
Floodwood Loop	Existing Roadways Open to ATV Traffic - No Improvements Needed	51	20	8	NENE
Floodwood Loop	Existing Roadways Open to ATV Traffic - No Improvements Needed	51	20	9	NENW
Floodwood Loop	Existing Roadways Open to ATV Traffic - No Improvements Needed	51	20	9	NWNW
Floodwood Loop	Existing Roadways Open to ATV Traffic - No Improvements Needed	51	20	10	SESE
Floodwood Loop	Existing Roadways Open to ATV Traffic - No Improvements Needed	51	20	11	NWNW
Floodwood Loop	Existing Roadways Open to ATV Traffic - No Improvements Needed	51	20	11	NWSW
Floodwood Loop	Existing Roadways Open to ATV Traffic - No Improvements Needed	51	20	11	SWNW
Floodwood Loop	Existing Roadways Open to ATV Traffic - No Improvements Needed	51	20	11	SWSW
Floodwood Loop	Existing Roadways Open to ATV Traffic - No Improvements Needed	51	20	15	NENE
Floodwood Loop	Existing Roadways Open to ATV Traffic - No Improvements Needed	51	20	15	NESE
Floodwood Loop	Existing Roadways Open to ATV Traffic - No Improvements Needed	51	20	15	SENE
Floodwood Loop	Existing Roadways Open to ATV Traffic - No Improvements Needed	51	20	15	SESE
Floodwood Loop	Existing Roadways Open to ATV Traffic - No Improvements Needed	51	20	22	NENE
Floodwood Loop	Existing Roadways Open to ATV Traffic - No Improvements Needed	51	20	22	SENE
Floodwood Loop	Existing Roadways Open to ATV Traffic - No Improvements Needed	51	20	23	NWSW

Attachment A2: Public Land Survey 1/4, 1/4 Section, Township, Range

Trail Group	Trail Route Category	Township	Range	Section	QQ ID
Floodwood Loop	Existing Roadways Open to ATV Traffic - No Improvements Needed	51	20	23	SWNW
Floodwood Loop	Existing Roadways Open to ATV Traffic - No Improvements Needed	51	20	23	SWSW
Floodwood Loop	Existing Trails or Roadways - Improvements Needed	51	19	7	NESE
Floodwood Loop	Existing Trails or Roadways - Improvements Needed	51	19	7	NWSE
Floodwood Loop	Existing Trails or Roadways - Improvements Needed	51	19	7	SESE
Floodwood Loop	Existing Trails or Roadways - Improvements Needed	51	19	17	NENW
Floodwood Loop	Existing Trails or Roadways - Improvements Needed	51	19	17	NESW
Floodwood Loop	Existing Trails or Roadways - Improvements Needed	51	19	17	NWNW
Floodwood Loop	Existing Trails or Roadways - Improvements Needed	51	19	17	SENW
Floodwood Loop	Existing Trails or Roadways - Improvements Needed	51	19	17	SESW
Floodwood Loop	Existing Trails or Roadways - Improvements Needed	51	19	17	SWSE
Floodwood Loop	Existing Trails or Roadways - Improvements Needed	51	19	18	NENE
Floodwood Loop	Existing Trails or Roadways - Improvements Needed	51	19	19	NESE
Floodwood Loop	Existing Trails or Roadways - Improvements Needed	51	19	19	SESE
Floodwood Loop	Existing Trails or Roadways - Improvements Needed	51	19	19	SESW
Floodwood Loop	Existing Trails or Roadways - Improvements Needed	51	19	19	SWSE
Floodwood Loop	Existing Trails or Roadways - Improvements Needed	51	19	19	Gov. Lot 3
Floodwood Loop	Existing Trails or Roadways - Improvements Needed	51	19	19	Gov. Lot 4
Floodwood Loop	Existing Trails or Roadways - Improvements Needed	51	19	20	NENE
Floodwood Loop	Existing Trails or Roadways - Improvements Needed	51	19	20	NESW
Floodwood Loop	Existing Trails or Roadways - Improvements Needed	51	19	20	NWNE
Floodwood Loop	Existing Trails or Roadways - Improvements Needed	51	19	20	NWSW
Floodwood Loop	Existing Trails or Roadways - Improvements Needed	51	19	20	SENE
Floodwood Loop	Existing Trails or Roadways - Improvements Needed	51	19	20	SENW
Floodwood Loop	Existing Trails or Roadways - Improvements Needed	51	19	20	SWNE
Floodwood Loop	Existing Trails or Roadways - Improvements Needed	51	19	21	NESE
Floodwood Loop	Existing Trails or Roadways - Improvements Needed	51	19	21	SENE
Floodwood Loop	Existing Trails or Roadways - Improvements Needed	51	19	21	SENW
Floodwood Loop	Existing Trails or Roadways - Improvements Needed	51	19	21	SWNE
Floodwood Loop	Existing Trails or Roadways - Improvements Needed	51	19	21	SWNW
Floodwood Loop	Existing Trails or Roadways - Improvements Needed	51	19	22	NESE
Floodwood Loop	Existing Trails or Roadways - Improvements Needed	51	19	22	NESW
Floodwood Loop	Existing Trails or Roadways - Improvements Needed	51	19	22	NWSE
Floodwood Loop	Existing Trails or Roadways - Improvements Needed	51	19	22	SENW
Floodwood Loop	Existing Trails or Roadways - Improvements Needed	51	19	22	SWNW
Floodwood Loop	Existing Trails or Roadways - Improvements Needed	51	19	23	NWSW
Floodwood Loop	Existing Trails or Roadways - Improvements Needed	51	19	7	NESW
Floodwood Loop	Existing Trails or Roadways - Improvements Needed	51	19	7	Gov. Lot 3
Floodwood Loop	Existing Trails or Roadways - Improvements Needed	51	20	11	SESW
Floodwood Loop	Existing Trails or Roadways - Improvements Needed	51	20	11	SWSE
Floodwood Loop	Existing Trails or Roadways - Improvements Needed	51	20	11	SESE
Floodwood Loop	Existing Trails or Roadways - Improvements Needed	51	20	12	SWSW
Floodwood Loop	Existing Trails or Roadways - Improvements Needed	51	20	12	NESE
Floodwood Loop	Existing Trails or Roadways - Improvements Needed	51	20	12	NWSE
Floodwood Loop	Existing Trails or Roadways - Improvements Needed	51	20	12	SWSE
Floodwood Loop	Existing Trails or Roadways - Improvements Needed	51	20	13	NWNE
Floodwood Loop	Existing Trails or Roadways - Improvements Needed	51	20	13	NENW
Floodwood Loop	Existing Trails or Roadways - Improvements Needed	51	20	13	NWNW
Floodwood Loop	Existing Trails or Roadways - Improvements Needed	51	20	14	NENW
Floodwood Loop	Existing Trails or Roadways - Improvements Needed	51	20	23	SESE
Floodwood Loop	Existing Trails or Roadways - Improvements Needed	51	20	23	SESW
Floodwood Loop	Existing Trails or Roadways - Improvements Needed	51	20	23	SWSE

Attachment A2: Public Land Survey 1/4, 1/4 Section, Township, Range

Trail Group	Trail Route Category	Township	Range	Section	QQ ID
Floodwood Loop	Existing Trails or Roadways - Improvements Needed	51	20	23	SWSW
Floodwood Loop	Existing Trails or Roadways - Improvements Needed	51	20	24	NESE
Floodwood Loop	Existing Trails or Roadways - Improvements Needed	51	20	24	SESE
Floodwood Loop	Existing Trails or Roadways - Improvements Needed	51	20	24	SESW
Floodwood Loop	Existing Trails or Roadways - Improvements Needed	51	20	24	SWSE
Floodwood Loop	Existing Trails or Roadways - Improvements Needed	51	20	24	SWSW
Lumberjack Extension	Existing Roadways Open to ATV Traffic - No Improvements Needed	51	16	6	SESE
Lumberjack Extension	Existing Roadways Open to ATV Traffic - No Improvements Needed	51	16	6	SESW
Lumberjack Extension	Existing Roadways Open to ATV Traffic - No Improvements Needed	51	16	6	SWSE
Lumberjack Extension	Existing Roadways Open to ATV Traffic - No Improvements Needed	51	16	6	Gov. Lot 7
Lumberjack Extension	Existing Roadways Open to ATV Traffic - No Improvements Needed	51	16	7	NWNE
Lumberjack Extension	Existing Roadways Open to ATV Traffic - No Improvements Needed	51	16	7	Gov. Lot 1
Lumberjack Extension	Existing Roadways Open to ATV Traffic - No Improvements Needed	51	17	12	NENE
Lumberjack Extension	Existing Roadways Open to ATV Traffic - No Improvements Needed	51	17	12	NWNE
Lumberjack Extension	Existing Trails or Roadways - Improvements Needed	51	16	4	Gov. Lot 4
Lumberjack Extension	Existing Trails or Roadways - Improvements Needed	51	16	5	NESW
Lumberjack Extension	Existing Trails or Roadways - Improvements Needed	51	16	5	NWSE
Lumberjack Extension	Existing Trails or Roadways - Improvements Needed	51	16	5	NWSW
Lumberjack Extension	Existing Trails or Roadways - Improvements Needed	51	16	5	SENE
Lumberjack Extension	Existing Trails or Roadways - Improvements Needed	51	16	5	SWNE
Lumberjack Extension	Existing Trails or Roadways - Improvements Needed	51	16	5	Gov. Lot 1
Lumberjack Extension	Existing Trails or Roadways - Improvements Needed	51	16	6	NESE
Lumberjack Extension	Existing Trails or Roadways - Improvements Needed	51	16	6	SESE
Lumberjack Extension	Existing Trails or Roadways - Improvements Needed	51	17	13	NENE
Lumberjack Extension	Existing Trails or Roadways - Improvements Needed	51	17	13	NESW
Lumberjack Extension	Existing Trails or Roadways - Improvements Needed	51	17	13	NWNE
Lumberjack Extension	Existing Trails or Roadways - Improvements Needed	51	17	13	NWSW
Lumberjack Extension	Existing Trails or Roadways - Improvements Needed	51	17	13	SENW
Lumberjack Extension	Existing Trails or Roadways - Improvements Needed	51	17	13	SWNE
Lumberjack Extension	Existing Trails or Roadways - Improvements Needed	51	17	13	SWSW
Lumberjack Extension	Existing Trails or Roadways - Improvements Needed	51	17	14	SESE
Lumberjack Extension	Existing Trails or Roadways - Improvements Needed	51	17	23	NENE
Lumberjack Extension	Existing Trails or Roadways - Improvements Needed	51	17	23	NESE
Lumberjack Extension	Existing Trails or Roadways - Improvements Needed	51	17	23	SENE
Lumberjack Extension	Existing Trails or Roadways - Improvements Needed	51	17	23	SESE
Lumberjack Extension	Existing Trails or Roadways - Improvements Needed	51	17	25	NWSW
Lumberjack Extension	Existing Trails or Roadways - Improvements Needed	51	17	25	SWNW
Lumberjack Extension	Existing Trails or Roadways - Improvements Needed	51	17	25	SWSW
Lumberjack Extension	Existing Trails or Roadways - Improvements Needed	51	17	26	NENE
Lumberjack Extension	Existing Trails or Roadways - Improvements Needed	51	17	26	SENE
Lumberjack Extension	Existing Trails or Roadways - Improvements Needed	51	17	36	NENW
Lumberjack Extension	Existing Trails or Roadways - Improvements Needed	51	17	36	NESW
Lumberjack Extension	Existing Trails or Roadways - Improvements Needed	51	17	36	NWNW
Lumberjack Extension	Existing Trails or Roadways - Improvements Needed	51	17	36	SENW
Lumberjack Extension	Existing Trails or Roadways - Improvements Needed	52	16	14	NESW
Lumberjack Extension	Existing Trails or Roadways - Improvements Needed	52	16	14	NWSE
Lumberjack Extension	Existing Trails or Roadways - Improvements Needed	52	16	14	SESW
Lumberjack Extension	Existing Trails or Roadways - Improvements Needed	52	16	22	SESE
Lumberjack Extension	Existing Trails or Roadways - Improvements Needed	52	16	22	SWSE
Lumberjack Extension	Existing Trails or Roadways - Improvements Needed	52	16	22	Gov. Lot 2
Lumberjack Extension	Existing Trails or Roadways - Improvements Needed	52	16	22	Gov. Lot 9
Lumberjack Extension	Existing Trails or Roadways - Improvements Needed	52	16	22	Gov. Lot 99

Attachment A2: Public Land Survey 1/4, 1/4 Section, Township, Range

Trail Group	Trail Route Category	Township	Range	Section	QQ ID
Lumberjack Extension	Existing Trails or Roadways - Improvements Needed	52	16	23	NENW
Lumberjack Extension	Existing Trails or Roadways - Improvements Needed	52	16	23	NWNW
Lumberjack Extension	Existing Trails or Roadways - Improvements Needed	52	16	23	SWNW
Lumberjack Extension	Existing Trails or Roadways - Improvements Needed	52	16	27	NENW
Lumberjack Extension	Existing Trails or Roadways - Improvements Needed	52	16	27	NWNE
Lumberjack Extension	Existing Trails or Roadways - Improvements Needed	52	16	27	NWSW
Lumberjack Extension	Existing Trails or Roadways - Improvements Needed	52	16	27	SENW
Lumberjack Extension	Existing Trails or Roadways - Improvements Needed	52	16	27	SWNW
Lumberjack Extension	Existing Trails or Roadways - Improvements Needed	52	16	27	SWSW
Lumberjack Extension	Existing Trails or Roadways - Improvements Needed	52	16	28	SESE
Lumberjack Extension	Existing Trails or Roadways - Improvements Needed	52	16	33	NENE
Lumberjack Extension	Existing Trails or Roadways - Improvements Needed	52	16	33	NESW
Lumberjack Extension	Existing Trails or Roadways - Improvements Needed	52	16	33	NWNE
Lumberjack Extension	Existing Trails or Roadways - Improvements Needed	52	16	33	SENW
Lumberjack Extension	Existing Trails or Roadways - Improvements Needed	52	16	33	SESW
Lumberjack Extension	Existing Trails or Roadways - Improvements Needed	52	16	33	SWNE
Lumberjack Extension	Existing Trails or Roadways - Improvements Needed	52	16	33	SWSW
Lumberjack Extension	Proposed Route - New Construction Proposed for ATV Use	51	17	12	NESE
Lumberjack Extension	Proposed Route - New Construction Proposed for ATV Use	51	17	12	NWNE
Lumberjack Extension	Proposed Route - New Construction Proposed for ATV Use	51	17	12	SENE
Lumberjack Extension	Proposed Route - New Construction Proposed for ATV Use	51	17	12	SESE
Lumberjack Extension	Proposed Route - New Construction Proposed for ATV Use	51	17	12	SWNE
Lumberjack Extension	Proposed Route - New Construction Proposed for ATV Use	51	17	13	NENE
Lumberjack Extension	Proposed Route - New Construction Proposed for ATV Use	51	17	23	SESE
Lumberjack Extension	Proposed Route - New Construction Proposed for ATV Use	51	17	24	SWSW
Lumberjack Extension	Proposed Route - New Construction Proposed for ATV Use	51	17	25	NWNW
Lumberjack Extension	Proposed Route - New Construction Proposed for ATV Use	51	17	25	SWNW
Lumberjack to Brookston	Existing Roadways Open to ATV Traffic - No Improvements Needed	50	18	2	Gov. Lot 4
Lumberjack to Brookston	Existing Roadways Open to ATV Traffic - No Improvements Needed	51	18	34	NESE
Lumberjack to Brookston	Existing Roadways Open to ATV Traffic - No Improvements Needed	51	18	34	NWNE
Lumberjack to Brookston	Existing Roadways Open to ATV Traffic - No Improvements Needed	51	18	34	NWSE
Lumberjack to Brookston	Existing Roadways Open to ATV Traffic - No Improvements Needed	51	18	34	SWNE
Lumberjack to Brookston	Existing Roadways Open to ATV Traffic - No Improvements Needed	51	18	35	NWSW
Lumberjack to Brookston	Existing Roadways Open to ATV Traffic - No Improvements Needed	51	18	35	SWSW
Lumberjack to Brookston	Existing Trails or Roadways - Improvements Needed	49	17	10	Gov. Lot 1
Lumberjack to Brookston	Existing Trails or Roadways - Improvements Needed	49	17	14	Gov. Lot 1
Lumberjack to Brookston	Existing Trails or Roadways - Improvements Needed	49	17	14	Gov. Lot 2
Lumberjack to Brookston	Existing Trails or Roadways - Improvements Needed	49	17	14	Gov. Lot 3
Lumberjack to Brookston	Existing Trails or Roadways - Improvements Needed	49	17	14	Gov. Lot 4
Lumberjack to Brookston	Existing Trails or Roadways - Improvements Needed	49	17	15	Gov. Lot 1
Lumberjack to Brookston	Existing Trails or Roadways - Improvements Needed	50	17	6	NWSE
Lumberjack to Brookston	Existing Trails or Roadways - Improvements Needed	50	17	6	SENW
Lumberjack to Brookston	Existing Trails or Roadways - Improvements Needed	50	17	6	SWNE
Lumberjack to Brookston	Existing Trails or Roadways - Improvements Needed	50	17	6	SWSE
Lumberjack to Brookston	Existing Trails or Roadways - Improvements Needed	50	17	6	Gov. Lot 5
Lumberjack to Brookston	Existing Trails or Roadways - Improvements Needed	50	17	7	NESE
Lumberjack to Brookston	Existing Trails or Roadways - Improvements Needed	50	17	7	NWNE
Lumberjack to Brookston	Existing Trails or Roadways - Improvements Needed	50	17	7	NWSE
Lumberjack to Brookston	Existing Trails or Roadways - Improvements Needed	50	17	7	SENW
Lumberjack to Brookston	Existing Trails or Roadways - Improvements Needed	50	17	8	NESE
Lumberjack to Brookston	Existing Trails or Roadways - Improvements Needed	50	17	8	NESW
Lumberjack to Brookston	Existing Trails or Roadways - Improvements Needed	50	17	8	NWSE

Attachment A2: Public Land Survey 1/4, 1/4 Section, Township, Range

Trail Group	Trail Route Category	Township	Range	Section	QQ ID
Lumberjack to Brookston	Existing Trails or Roadways - Improvements Needed	50	17	8	NWSW
Lumberjack to Brookston	Existing Trails or Roadways - Improvements Needed	50	17	8	SESE
Lumberjack to Brookston	Existing Trails or Roadways - Improvements Needed	50	17	8	SWNE
Lumberjack to Brookston	Existing Trails or Roadways - Improvements Needed	50	17	9	SWSW
Lumberjack to Brookston	Existing Trails or Roadways - Improvements Needed	50	17	14	SESW
Lumberjack to Brookston	Existing Trails or Roadways - Improvements Needed	50	17	14	SWSE
Lumberjack to Brookston	Existing Trails or Roadways - Improvements Needed	50	17	14	SWSW
Lumberjack to Brookston	Existing Trails or Roadways - Improvements Needed	50	17	15	NWNW
Lumberjack to Brookston	Existing Trails or Roadways - Improvements Needed	50	17	15	NWSE
Lumberjack to Brookston	Existing Trails or Roadways - Improvements Needed	50	17	15	SENW
Lumberjack to Brookston	Existing Trails or Roadways - Improvements Needed	50	17	15	SESE
Lumberjack to Brookston	Existing Trails or Roadways - Improvements Needed	50	17	15	SWSE
Lumberjack to Brookston	Existing Trails or Roadways - Improvements Needed	50	17	15	Gov. Lot 1
Lumberjack to Brookston	Existing Trails or Roadways - Improvements Needed	50	17	15	Gov. Lot 2
Lumberjack to Brookston	Existing Trails or Roadways - Improvements Needed	50	17	16	NWNW
Lumberjack to Brookston	Existing Trails or Roadways - Improvements Needed	50	17	16	Gov. Lot 2
Lumberjack to Brookston	Existing Trails or Roadways - Improvements Needed	50	17	16	Gov. Lot 3
Lumberjack to Brookston	Existing Trails or Roadways - Improvements Needed	50	17	16	Gov. Lot 4
Lumberjack to Brookston	Existing Trails or Roadways - Improvements Needed	50	17	17	NENE
Lumberjack to Brookston	Existing Trails or Roadways - Improvements Needed	50	17	34	NESE
Lumberjack to Brookston	Existing Trails or Roadways - Improvements Needed	50	17	34	SENE
Lumberjack to Brookston	Existing Trails or Roadways - Improvements Needed	50	17	34	Gov. Lot 1
Lumberjack to Brookston	Existing Trails or Roadways - Improvements Needed	50	18	1	SENE
Lumberjack to Brookston	Existing Trails or Roadways - Improvements Needed	50	18	1	SWNE
Lumberjack to Brookston	Existing Trails or Roadways - Improvements Needed	50	18	1	Gov. Lot 4
Lumberjack to Brookston	Existing Trails or Roadways - Improvements Needed	50	18	1	Gov. Lot 99
Road Route Connections	Existing Roadways Open to ATV Traffic - No Improvements Needed	49	15	3	NENW
Road Route Connections	Existing Roadways Open to ATV Traffic - No Improvements Needed	49	15	3	NWNW
Road Route Connections	Existing Roadways Open to ATV Traffic - No Improvements Needed	49	15	3	NWSE
Road Route Connections	Existing Roadways Open to ATV Traffic - No Improvements Needed	49	15	3	SENW
Road Route Connections	Existing Roadways Open to ATV Traffic - No Improvements Needed	49	15	3	SESE
Road Route Connections	Existing Roadways Open to ATV Traffic - No Improvements Needed	49	15	3	SWNE
Road Route Connections	Existing Roadways Open to ATV Traffic - No Improvements Needed	49	15	3	SWSE
Road Route Connections	Existing Roadways Open to ATV Traffic - No Improvements Needed	49	15	4	SESW
Road Route Connections	Existing Roadways Open to ATV Traffic - No Improvements Needed	49	15	4	SWSE
Road Route Connections	Existing Roadways Open to ATV Traffic - No Improvements Needed	49	15	4	SWSW
Road Route Connections	Existing Roadways Open to ATV Traffic - No Improvements Needed	49	15	5	SESE
Road Route Connections	Existing Roadways Open to ATV Traffic - No Improvements Needed	49	15	5	SESW
Road Route Connections	Existing Roadways Open to ATV Traffic - No Improvements Needed	49	15	5	SWSE
Road Route Connections	Existing Roadways Open to ATV Traffic - No Improvements Needed	49	15	5	SWSW
Road Route Connections	Existing Roadways Open to ATV Traffic - No Improvements Needed	49	15	6	SESE
Road Route Connections	Existing Roadways Open to ATV Traffic - No Improvements Needed	49	15	7	NENE
Road Route Connections	Existing Roadways Open to ATV Traffic - No Improvements Needed	49	15	7	NENW
Road Route Connections	Existing Roadways Open to ATV Traffic - No Improvements Needed	49	15	7	NWNE
Road Route Connections	Existing Roadways Open to ATV Traffic - No Improvements Needed	49	15	7	NWNW
Road Route Connections	Existing Roadways Open to ATV Traffic - No Improvements Needed	49	15	9	NENE
Road Route Connections	Existing Roadways Open to ATV Traffic - No Improvements Needed	49	15	9	NWNE
Road Route Connections	Existing Roadways Open to ATV Traffic - No Improvements Needed	49	15	10	NENE
Road Route Connections	Existing Roadways Open to ATV Traffic - No Improvements Needed	49	15	10	NESE
Road Route Connections	Existing Roadways Open to ATV Traffic - No Improvements Needed	49	15	10	NWNW
Road Route Connections	Existing Roadways Open to ATV Traffic - No Improvements Needed	49	15	10	SENE
Road Route Connections	Existing Roadways Open to ATV Traffic - No Improvements Needed	49	15	10	SENW

Attachment A2: Public Land Survey 1/4, 1/4 Section, Township, Range

Trail Group	Trail Route Category	Township	Range	Section	QQ ID
Road Route Connections	Existing Roadways Open to ATV Traffic - No Improvements Needed	49	15	10	SWNE
Road Route Connections	Existing Roadways Open to ATV Traffic - No Improvements Needed	49	15	10	SWNW
Road Route Connections	Existing Roadways Open to ATV Traffic - No Improvements Needed	49	15	16	NESW
Road Route Connections	Existing Roadways Open to ATV Traffic - No Improvements Needed	49	15	16	NWSE
Road Route Connections	Existing Roadways Open to ATV Traffic - No Improvements Needed	49	15	16	NWSW
Road Route Connections	Existing Roadways Open to ATV Traffic - No Improvements Needed	49	15	16	SWNW
Road Route Connections	Existing Roadways Open to ATV Traffic - No Improvements Needed	49	15	16	SWSE
Road Route Connections	Existing Roadways Open to ATV Traffic - No Improvements Needed	49	15	17	NENE
Road Route Connections	Existing Roadways Open to ATV Traffic - No Improvements Needed	49	15	17	NENW
Road Route Connections	Existing Roadways Open to ATV Traffic - No Improvements Needed	49	15	17	NWNE
Road Route Connections	Existing Roadways Open to ATV Traffic - No Improvements Needed	49	15	17	NWNW
Road Route Connections	Existing Roadways Open to ATV Traffic - No Improvements Needed	49	15	17	SENE
Road Route Connections	Existing Roadways Open to ATV Traffic - No Improvements Needed	49	15	18	NENE
Road Route Connections	Existing Roadways Open to ATV Traffic - No Improvements Needed	49	15	18	NENW
Road Route Connections	Existing Roadways Open to ATV Traffic - No Improvements Needed	49	15	18	NWNE
Road Route Connections	Existing Roadways Open to ATV Traffic - No Improvements Needed	49	15	18	NWNW
Road Route Connections	Existing Roadways Open to ATV Traffic - No Improvements Needed	49	15	29	SWNW
Road Route Connections	Existing Roadways Open to ATV Traffic - No Improvements Needed	49	15	30	NENW
Road Route Connections	Existing Roadways Open to ATV Traffic - No Improvements Needed	49	15	30	NWNE
Road Route Connections	Existing Roadways Open to ATV Traffic - No Improvements Needed	49	15	30	NWNW
Road Route Connections	Existing Roadways Open to ATV Traffic - No Improvements Needed	49	15	30	SENE
Road Route Connections	Existing Roadways Open to ATV Traffic - No Improvements Needed	49	15	30	SWNE
Road Route Connections	Existing Roadways Open to ATV Traffic - No Improvements Needed	49	15	30	SWNW
Road Route Connections	Existing Roadways Open to ATV Traffic - No Improvements Needed	49	16	4	SESE
Road Route Connections	Existing Roadways Open to ATV Traffic - No Improvements Needed	49	16	4	SESW
Road Route Connections	Existing Roadways Open to ATV Traffic - No Improvements Needed	49	16	4	SWSE
Road Route Connections	Existing Roadways Open to ATV Traffic - No Improvements Needed	49	16	4	SWSW
Road Route Connections	Existing Roadways Open to ATV Traffic - No Improvements Needed	49	16	5	SESE
Road Route Connections	Existing Roadways Open to ATV Traffic - No Improvements Needed	49	16	5	SESW
Road Route Connections	Existing Roadways Open to ATV Traffic - No Improvements Needed	49	16	5	SWSE
Road Route Connections	Existing Roadways Open to ATV Traffic - No Improvements Needed	49	16	5	SWSW
Road Route Connections	Existing Roadways Open to ATV Traffic - No Improvements Needed	49	16	6	SESE
Road Route Connections	Existing Roadways Open to ATV Traffic - No Improvements Needed	49	16	6	SESW
Road Route Connections	Existing Roadways Open to ATV Traffic - No Improvements Needed	49	16	6	SWSE
Road Route Connections	Existing Roadways Open to ATV Traffic - No Improvements Needed	49	16	6	Gov. Lot 7
Road Route Connections	Existing Roadways Open to ATV Traffic - No Improvements Needed	49	16	7	SESE
Road Route Connections	Existing Roadways Open to ATV Traffic - No Improvements Needed	49	16	7	SESW
Road Route Connections	Existing Roadways Open to ATV Traffic - No Improvements Needed	49	16	7	SWSE
Road Route Connections	Existing Roadways Open to ATV Traffic - No Improvements Needed	49	16	7	Gov. Lot 1
Road Route Connections	Existing Roadways Open to ATV Traffic - No Improvements Needed	49	16	7	Gov. Lot 4
Road Route Connections	Existing Roadways Open to ATV Traffic - No Improvements Needed	49	16	8	SESE
Road Route Connections	Existing Roadways Open to ATV Traffic - No Improvements Needed	49	16	8	SWSE
Road Route Connections	Existing Roadways Open to ATV Traffic - No Improvements Needed	49	16	9	NENE
Road Route Connections	Existing Roadways Open to ATV Traffic - No Improvements Needed	49	16	9	SESE
Road Route Connections	Existing Roadways Open to ATV Traffic - No Improvements Needed	49	16	9	SESW
Road Route Connections	Existing Roadways Open to ATV Traffic - No Improvements Needed	49	16	9	SWSE
Road Route Connections	Existing Roadways Open to ATV Traffic - No Improvements Needed	49	16	9	SWSW
Road Route Connections	Existing Roadways Open to ATV Traffic - No Improvements Needed	49	16	10	NENE
Road Route Connections	Existing Roadways Open to ATV Traffic - No Improvements Needed	49	16	10	NENW
Road Route Connections	Existing Roadways Open to ATV Traffic - No Improvements Needed	49	16	10	NWNE
Road Route Connections	Existing Roadways Open to ATV Traffic - No Improvements Needed	49	16	10	NWNW
Road Route Connections	Existing Roadways Open to ATV Traffic - No Improvements Needed	49	16	10	SESE

Attachment A2: Public Land Survey 1/4, 1/4 Section, Township, Range

Trail Group	Trail Route Category	Township	Range	Section	QQ ID
Road Route Connections	Existing Roadways Open to ATV Traffic - No Improvements Needed	49	16	10	SESW
Road Route Connections	Existing Roadways Open to ATV Traffic - No Improvements Needed	49	16	10	SWSE
Road Route Connections	Existing Roadways Open to ATV Traffic - No Improvements Needed	49	16	10	SWSW
Road Route Connections	Existing Roadways Open to ATV Traffic - No Improvements Needed	49	16	11	NENE
Road Route Connections	Existing Roadways Open to ATV Traffic - No Improvements Needed	49	16	11	NENW
Road Route Connections	Existing Roadways Open to ATV Traffic - No Improvements Needed	49	16	11	NWNE
Road Route Connections	Existing Roadways Open to ATV Traffic - No Improvements Needed	49	16	11	NWNW
Road Route Connections	Existing Roadways Open to ATV Traffic - No Improvements Needed	49	16	11	SESE
Road Route Connections	Existing Roadways Open to ATV Traffic - No Improvements Needed	49	16	11	SESW
Road Route Connections	Existing Roadways Open to ATV Traffic - No Improvements Needed	49	16	11	SWSE
Road Route Connections	Existing Roadways Open to ATV Traffic - No Improvements Needed	49	16	11	SWSW
Road Route Connections	Existing Roadways Open to ATV Traffic - No Improvements Needed	49	16	12	NENE
Road Route Connections	Existing Roadways Open to ATV Traffic - No Improvements Needed	49	16	12	NENW
Road Route Connections	Existing Roadways Open to ATV Traffic - No Improvements Needed	49	16	12	NWNE
Road Route Connections	Existing Roadways Open to ATV Traffic - No Improvements Needed	49	16	12	NWNW
Road Route Connections	Existing Roadways Open to ATV Traffic - No Improvements Needed	49	16	13	NENE
Road Route Connections	Existing Roadways Open to ATV Traffic - No Improvements Needed	49	16	13	NENW
Road Route Connections	Existing Roadways Open to ATV Traffic - No Improvements Needed	49	16	13	NWNE
Road Route Connections	Existing Roadways Open to ATV Traffic - No Improvements Needed	49	16	13	NWNW
Road Route Connections	Existing Roadways Open to ATV Traffic - No Improvements Needed	49	16	14	NENE
Road Route Connections	Existing Roadways Open to ATV Traffic - No Improvements Needed	49	16	14	NWNW
Road Route Connections	Existing Roadways Open to ATV Traffic - No Improvements Needed	49	16	15	NENE
Road Route Connections	Existing Roadways Open to ATV Traffic - No Improvements Needed	49	16	16	NENE
Road Route Connections	Existing Roadways Open to ATV Traffic - No Improvements Needed	49	16	16	NWNW
Road Route Connections	Existing Roadways Open to ATV Traffic - No Improvements Needed	49	16	17	NENE
Road Route Connections	Existing Roadways Open to ATV Traffic - No Improvements Needed	49	16	17	NENW
Road Route Connections	Existing Roadways Open to ATV Traffic - No Improvements Needed	49	16	17	NWNE
Road Route Connections	Existing Roadways Open to ATV Traffic - No Improvements Needed	49	16	17	NWNW
Road Route Connections	Existing Roadways Open to ATV Traffic - No Improvements Needed	49	16	18	NENE
Road Route Connections	Existing Roadways Open to ATV Traffic - No Improvements Needed	49	16	18	Gov. Lot 1
Road Route Connections	Existing Roadways Open to ATV Traffic - No Improvements Needed	49	16	30	Gov. Lot 11
Road Route Connections	Existing Roadways Open to ATV Traffic - No Improvements Needed	49	17	1	NESE
Road Route Connections	Existing Roadways Open to ATV Traffic - No Improvements Needed	49	17	1	SENE
Road Route Connections	Existing Roadways Open to ATV Traffic - No Improvements Needed	49	17	1	SESE
Road Route Connections	Existing Roadways Open to ATV Traffic - No Improvements Needed	49	17	1	SESW
Road Route Connections	Existing Roadways Open to ATV Traffic - No Improvements Needed	49	17	1	SWSE
Road Route Connections	Existing Roadways Open to ATV Traffic - No Improvements Needed	49	17	1	SWSW
Road Route Connections	Existing Roadways Open to ATV Traffic - No Improvements Needed	49	17	1	Gov. Lot 1
Road Route Connections	Existing Roadways Open to ATV Traffic - No Improvements Needed	49	17	3	NESE
Road Route Connections	Existing Roadways Open to ATV Traffic - No Improvements Needed	49	17	3	SENE
Road Route Connections	Existing Roadways Open to ATV Traffic - No Improvements Needed	49	17	3	SESE
Road Route Connections	Existing Roadways Open to ATV Traffic - No Improvements Needed	49	17	3	Gov. Lot 1
Road Route Connections	Existing Roadways Open to ATV Traffic - No Improvements Needed	49	17	10	NENE
Road Route Connections	Existing Roadways Open to ATV Traffic - No Improvements Needed	49	17	10	NESE
Road Route Connections	Existing Roadways Open to ATV Traffic - No Improvements Needed	49	17	10	SENE
Road Route Connections	Existing Roadways Open to ATV Traffic - No Improvements Needed	49	17	11	NENE
Road Route Connections	Existing Roadways Open to ATV Traffic - No Improvements Needed	49	17	11	NENW
Road Route Connections	Existing Roadways Open to ATV Traffic - No Improvements Needed	49	17	11	NWNE
Road Route Connections	Existing Roadways Open to ATV Traffic - No Improvements Needed	49	17	11	NWNW
Road Route Connections	Existing Roadways Open to ATV Traffic - No Improvements Needed	49	17	11	NWSW
Road Route Connections	Existing Roadways Open to ATV Traffic - No Improvements Needed	49	17	11	SWSW
Road Route Connections	Existing Roadways Open to ATV Traffic - No Improvements Needed	49	17	12	NENE

Attachment A2: Public Land Survey 1/4, 1/4 Section, Township, Range

Trail Group	Trail Route Category	Township	Range	Section	QQ ID
Road Route Connections	Existing Roadways Open to ATV Traffic - No Improvements Needed	49	17	12	NWNW
Road Route Connections	Existing Roadways Open to ATV Traffic - No Improvements Needed	49	17	12	SESE
Road Route Connections	Existing Roadways Open to ATV Traffic - No Improvements Needed	49	17	12	SESW
Road Route Connections	Existing Roadways Open to ATV Traffic - No Improvements Needed	49	17	12	SWSE
Road Route Connections	Existing Roadways Open to ATV Traffic - No Improvements Needed	49	17	12	SWSW
Road Route Connections	Existing Roadways Open to ATV Traffic - No Improvements Needed	49	17	13	NENE
Road Route Connections	Existing Roadways Open to ATV Traffic - No Improvements Needed	49	17	13	Gov. Lot 4
Road Route Connections	Existing Roadways Open to ATV Traffic - No Improvements Needed	49	17	14	NENE
Road Route Connections	Existing Roadways Open to ATV Traffic - No Improvements Needed	49	17	14	NENW
Road Route Connections	Existing Roadways Open to ATV Traffic - No Improvements Needed	49	17	14	NWNE
Road Route Connections	Existing Roadways Open to ATV Traffic - No Improvements Needed	49	17	14	NWNW
Road Route Connections	Existing Roadways Open to ATV Traffic - No Improvements Needed	49	17	14	Gov. Lot 4
Road Route Connections	Existing Roadways Open to ATV Traffic - No Improvements Needed	49	17	23	NESW
Road Route Connections	Existing Roadways Open to ATV Traffic - No Improvements Needed	49	17	23	SESW
Road Route Connections	Existing Roadways Open to ATV Traffic - No Improvements Needed	49	17	23	SWSE
Road Route Connections	Existing Roadways Open to ATV Traffic - No Improvements Needed	49	17	25	NENE
Road Route Connections	Existing Roadways Open to ATV Traffic - No Improvements Needed	49	17	25	NWSW
Road Route Connections	Existing Roadways Open to ATV Traffic - No Improvements Needed	49	17	25	SENE
Road Route Connections	Existing Roadways Open to ATV Traffic - No Improvements Needed	49	17	25	SENW
Road Route Connections	Existing Roadways Open to ATV Traffic - No Improvements Needed	49	17	25	SWNE
Road Route Connections	Existing Roadways Open to ATV Traffic - No Improvements Needed	49	17	25	SWNW
Road Route Connections	Existing Roadways Open to ATV Traffic - No Improvements Needed	49	17	26	NESE
Road Route Connections	Existing Roadways Open to ATV Traffic - No Improvements Needed	49	17	26	NWNE
Road Route Connections	Existing Roadways Open to ATV Traffic - No Improvements Needed	49	17	26	NWSE
Road Route Connections	Existing Roadways Open to ATV Traffic - No Improvements Needed	49	17	26	SENE
Road Route Connections	Existing Roadways Open to ATV Traffic - No Improvements Needed	49	17	26	SWNE
Road Route Connections	Existing Roadways Open to ATV Traffic - No Improvements Needed	49	17	26	SWSE
Road Route Connections	Existing Roadways Open to ATV Traffic - No Improvements Needed	49	17	35	NWNE
Road Route Connections	Existing Roadways Open to ATV Traffic - No Improvements Needed	50	15	6	Gov. Lot 5
Road Route Connections	Existing Roadways Open to ATV Traffic - No Improvements Needed	50	15	6	Gov. Lot 6
Road Route Connections	Existing Roadways Open to ATV Traffic - No Improvements Needed	50	15	6	Gov. Lot 7
Road Route Connections	Existing Roadways Open to ATV Traffic - No Improvements Needed	50	15	7	Gov. Lot 1
Road Route Connections	Existing Roadways Open to ATV Traffic - No Improvements Needed	50	15	7	Gov. Lot 2
Road Route Connections	Existing Roadways Open to ATV Traffic - No Improvements Needed	50	15	7	Gov. Lot 3
Road Route Connections	Existing Roadways Open to ATV Traffic - No Improvements Needed	50	15	18	SESE
Road Route Connections	Existing Roadways Open to ATV Traffic - No Improvements Needed	50	15	18	SESW
Road Route Connections	Existing Roadways Open to ATV Traffic - No Improvements Needed	50	15	18	SWSE
Road Route Connections	Existing Roadways Open to ATV Traffic - No Improvements Needed	50	15	18	Gov. Lot 2
Road Route Connections	Existing Roadways Open to ATV Traffic - No Improvements Needed	50	15	18	Gov. Lot 3
Road Route Connections	Existing Roadways Open to ATV Traffic - No Improvements Needed	50	15	18	Gov. Lot 4
Road Route Connections	Existing Roadways Open to ATV Traffic - No Improvements Needed	50	15	19	NENE
Road Route Connections	Existing Roadways Open to ATV Traffic - No Improvements Needed	50	15	20	NESW
Road Route Connections	Existing Roadways Open to ATV Traffic - No Improvements Needed	50	15	20	NWNW
Road Route Connections	Existing Roadways Open to ATV Traffic - No Improvements Needed	50	15	20	SENW
Road Route Connections	Existing Roadways Open to ATV Traffic - No Improvements Needed	50	15	20	SESW
Road Route Connections	Existing Roadways Open to ATV Traffic - No Improvements Needed	50	15	20	SWNW
Road Route Connections	Existing Roadways Open to ATV Traffic - No Improvements Needed	50	15	20	SWSE
Road Route Connections	Existing Roadways Open to ATV Traffic - No Improvements Needed	50	15	21	SESW
Road Route Connections	Existing Roadways Open to ATV Traffic - No Improvements Needed	50	15	21	SWSW
Road Route Connections	Existing Roadways Open to ATV Traffic - No Improvements Needed	50	15	27	NWSW
Road Route Connections	Existing Roadways Open to ATV Traffic - No Improvements Needed	50	15	27	SWSW
Road Route Connections	Existing Roadways Open to ATV Traffic - No Improvements Needed	50	15	28	NENE

Attachment A2: Public Land Survey 1/4, 1/4 Section, Township, Range

Trail Group	Trail Route Category	Township	Range	Section	QQ ID
Road Route Connections	Existing Roadways Open to ATV Traffic - No Improvements Needed	50	15	28	NENW
Road Route Connections	Existing Roadways Open to ATV Traffic - No Improvements Needed	50	15	28	NESE
Road Route Connections	Existing Roadways Open to ATV Traffic - No Improvements Needed	50	15	28	NWNE
Road Route Connections	Existing Roadways Open to ATV Traffic - No Improvements Needed	50	15	28	NWNW
Road Route Connections	Existing Roadways Open to ATV Traffic - No Improvements Needed	50	15	28	SENE
Road Route Connections	Existing Roadways Open to ATV Traffic - No Improvements Needed	50	15	29	NENE
Road Route Connections	Existing Roadways Open to ATV Traffic - No Improvements Needed	50	15	29	NWNE
Road Route Connections	Existing Roadways Open to ATV Traffic - No Improvements Needed	50	15	34	NWNW
Road Route Connections	Existing Roadways Open to ATV Traffic - No Improvements Needed	50	15	34	NWSW
Road Route Connections	Existing Roadways Open to ATV Traffic - No Improvements Needed	50	15	34	SWNW
Road Route Connections	Existing Roadways Open to ATV Traffic - No Improvements Needed	50	15	34	SWSW
Road Route Connections	Existing Roadways Open to ATV Traffic - No Improvements Needed	50	16	1	SENE
Road Route Connections	Existing Roadways Open to ATV Traffic - No Improvements Needed	50	16	1	Gov. Lot 1
Road Route Connections	Existing Roadways Open to ATV Traffic - No Improvements Needed	50	16	1	Gov. Lot 2
Road Route Connections	Existing Roadways Open to ATV Traffic - No Improvements Needed	50	16	1	Gov. Lot 3
Road Route Connections	Existing Roadways Open to ATV Traffic - No Improvements Needed	50	16	1	Gov. Lot 4
Road Route Connections	Existing Roadways Open to ATV Traffic - No Improvements Needed	50	16	2	Gov. Lot 1
Road Route Connections	Existing Roadways Open to ATV Traffic - No Improvements Needed	50	16	2	Gov. Lot 2
Road Route Connections	Existing Roadways Open to ATV Traffic - No Improvements Needed	50	16	2	Gov. Lot 3
Road Route Connections	Existing Roadways Open to ATV Traffic - No Improvements Needed	50	16	2	Gov. Lot 4
Road Route Connections	Existing Roadways Open to ATV Traffic - No Improvements Needed	50	16	3	Gov. Lot 1
Road Route Connections	Existing Roadways Open to ATV Traffic - No Improvements Needed	50	16	3	Gov. Lot 2
Road Route Connections	Existing Roadways Open to ATV Traffic - No Improvements Needed	50	16	3	Gov. Lot 3
Road Route Connections	Existing Roadways Open to ATV Traffic - No Improvements Needed	50	16	3	Gov. Lot 4
Road Route Connections	Existing Roadways Open to ATV Traffic - No Improvements Needed	50	16	4	Gov. Lot 1
Road Route Connections	Existing Roadways Open to ATV Traffic - No Improvements Needed	50	16	4	Gov. Lot 2
Road Route Connections	Existing Roadways Open to ATV Traffic - No Improvements Needed	50	16	5	Gov. Lot 3
Road Route Connections	Existing Roadways Open to ATV Traffic - No Improvements Needed	50	16	5	Gov. Lot 4
Road Route Connections	Existing Roadways Open to ATV Traffic - No Improvements Needed	50	16	5	Gov. Lot 5
Road Route Connections	Existing Roadways Open to ATV Traffic - No Improvements Needed	50	16	6	SENE
Road Route Connections	Existing Roadways Open to ATV Traffic - No Improvements Needed	50	16	6	SENW
Road Route Connections	Existing Roadways Open to ATV Traffic - No Improvements Needed	50	16	6	SWNE
Road Route Connections	Existing Roadways Open to ATV Traffic - No Improvements Needed	50	16	6	Gov. Lot 1
Road Route Connections	Existing Roadways Open to ATV Traffic - No Improvements Needed	50	16	6	Gov. Lot 2
Road Route Connections	Existing Roadways Open to ATV Traffic - No Improvements Needed	50	16	6	Gov. Lot 3
Road Route Connections	Existing Roadways Open to ATV Traffic - No Improvements Needed	50	16	6	Gov. Lot 4
Road Route Connections	Existing Roadways Open to ATV Traffic - No Improvements Needed	50	16	12	NESE
Road Route Connections	Existing Roadways Open to ATV Traffic - No Improvements Needed	50	16	12	SESE
Road Route Connections	Existing Roadways Open to ATV Traffic - No Improvements Needed	50	16	13	NENE
Road Route Connections	Existing Roadways Open to ATV Traffic - No Improvements Needed	50	16	13	SENE
Road Route Connections	Existing Roadways Open to ATV Traffic - No Improvements Needed	50	16	13	SESE
Road Route Connections	Existing Roadways Open to ATV Traffic - No Improvements Needed	50	16	13	SESW
Road Route Connections	Existing Roadways Open to ATV Traffic - No Improvements Needed	50	16	13	SWSE
Road Route Connections	Existing Roadways Open to ATV Traffic - No Improvements Needed	50	16	13	SWSW
Road Route Connections	Existing Roadways Open to ATV Traffic - No Improvements Needed	50	16	14	SESW
Road Route Connections	Existing Roadways Open to ATV Traffic - No Improvements Needed	50	16	14	SWSW
Road Route Connections	Existing Roadways Open to ATV Traffic - No Improvements Needed	50	16	15	SESE
Road Route Connections	Existing Roadways Open to ATV Traffic - No Improvements Needed	50	16	15	SESW
Road Route Connections	Existing Roadways Open to ATV Traffic - No Improvements Needed	50	16	15	SWSE
Road Route Connections	Existing Roadways Open to ATV Traffic - No Improvements Needed	50	16	15	SWSW
Road Route Connections	Existing Roadways Open to ATV Traffic - No Improvements Needed	50	16	16	SESE
Road Route Connections	Existing Roadways Open to ATV Traffic - No Improvements Needed	50	16	16	SWSE

Attachment A2: Public Land Survey 1/4, 1/4 Section, Township, Range

Trail Group	Trail Route Category	Township	Range	Section	QQ ID
Road Route Connections	Existing Roadways Open to ATV Traffic - No Improvements Needed	50	16	17	SESW
Road Route Connections	Existing Roadways Open to ATV Traffic - No Improvements Needed	50	16	17	SWSE
Road Route Connections	Existing Roadways Open to ATV Traffic - No Improvements Needed	50	16	19	NENE
Road Route Connections	Existing Roadways Open to ATV Traffic - No Improvements Needed	50	16	19	NENW
Road Route Connections	Existing Roadways Open to ATV Traffic - No Improvements Needed	50	16	19	NWNE
Road Route Connections	Existing Roadways Open to ATV Traffic - No Improvements Needed	50	16	19	Gov. Lot 1
Road Route Connections	Existing Roadways Open to ATV Traffic - No Improvements Needed	50	16	20	NENE
Road Route Connections	Existing Roadways Open to ATV Traffic - No Improvements Needed	50	16	20	NENW
Road Route Connections	Existing Roadways Open to ATV Traffic - No Improvements Needed	50	16	20	NWNE
Road Route Connections	Existing Roadways Open to ATV Traffic - No Improvements Needed	50	16	20	NWNW
Road Route Connections	Existing Roadways Open to ATV Traffic - No Improvements Needed	50	16	21	NENW
Road Route Connections	Existing Roadways Open to ATV Traffic - No Improvements Needed	50	16	21	NWNE
Road Route Connections	Existing Roadways Open to ATV Traffic - No Improvements Needed	50	16	21	NWNW
Road Route Connections	Existing Roadways Open to ATV Traffic - No Improvements Needed	50	16	22	NENE
Road Route Connections	Existing Roadways Open to ATV Traffic - No Improvements Needed	50	16	22	NESE
Road Route Connections	Existing Roadways Open to ATV Traffic - No Improvements Needed	50	16	22	SENE
Road Route Connections	Existing Roadways Open to ATV Traffic - No Improvements Needed	50	16	22	SESE
Road Route Connections	Existing Roadways Open to ATV Traffic - No Improvements Needed	50	16	23	NENE
Road Route Connections	Existing Roadways Open to ATV Traffic - No Improvements Needed	50	16	23	NENW
Road Route Connections	Existing Roadways Open to ATV Traffic - No Improvements Needed	50	16	23	NWNE
Road Route Connections	Existing Roadways Open to ATV Traffic - No Improvements Needed	50	16	23	NWNW
Road Route Connections	Existing Roadways Open to ATV Traffic - No Improvements Needed	50	16	24	NWNW
Road Route Connections	Existing Roadways Open to ATV Traffic - No Improvements Needed	50	16	27	NENE
Road Route Connections	Existing Roadways Open to ATV Traffic - No Improvements Needed	50	16	27	NESE
Road Route Connections	Existing Roadways Open to ATV Traffic - No Improvements Needed	50	16	27	SENE
Road Route Connections	Existing Roadways Open to ATV Traffic - No Improvements Needed	50	16	27	SESE
Road Route Connections	Existing Roadways Open to ATV Traffic - No Improvements Needed	50	16	29	SESW
Road Route Connections	Existing Roadways Open to ATV Traffic - No Improvements Needed	50	16	29	SWSE
Road Route Connections	Existing Roadways Open to ATV Traffic - No Improvements Needed	50	16	31	NENE
Road Route Connections	Existing Roadways Open to ATV Traffic - No Improvements Needed	50	16	31	NENW
Road Route Connections	Existing Roadways Open to ATV Traffic - No Improvements Needed	50	16	31	NWNE
Road Route Connections	Existing Roadways Open to ATV Traffic - No Improvements Needed	50	16	31	Gov. Lot 1
Road Route Connections	Existing Roadways Open to ATV Traffic - No Improvements Needed	50	16	32	NENE
Road Route Connections	Existing Roadways Open to ATV Traffic - No Improvements Needed	50	16	32	NENW
Road Route Connections	Existing Roadways Open to ATV Traffic - No Improvements Needed	50	16	32	NWNE
Road Route Connections	Existing Roadways Open to ATV Traffic - No Improvements Needed	50	16	32	NWNW
Road Route Connections	Existing Roadways Open to ATV Traffic - No Improvements Needed	50	16	33	NENE
Road Route Connections	Existing Roadways Open to ATV Traffic - No Improvements Needed	50	16	33	NENW
Road Route Connections	Existing Roadways Open to ATV Traffic - No Improvements Needed	50	16	33	NWNE
Road Route Connections	Existing Roadways Open to ATV Traffic - No Improvements Needed	50	16	33	NWNW
Road Route Connections	Existing Roadways Open to ATV Traffic - No Improvements Needed	50	16	34	NENE
Road Route Connections	Existing Roadways Open to ATV Traffic - No Improvements Needed	50	16	34	NENW
Road Route Connections	Existing Roadways Open to ATV Traffic - No Improvements Needed	50	16	34	NWNE
Road Route Connections	Existing Roadways Open to ATV Traffic - No Improvements Needed	50	16	34	NWNW
Road Route Connections	Existing Roadways Open to ATV Traffic - No Improvements Needed	50	17	1	Gov. Lot 1
Road Route Connections	Existing Roadways Open to ATV Traffic - No Improvements Needed	50	17	1	Gov. Lot 3
Road Route Connections	Existing Roadways Open to ATV Traffic - No Improvements Needed	50	17	1	Gov. Lot 4
Road Route Connections	Existing Roadways Open to ATV Traffic - No Improvements Needed	50	17	14	NENE
Road Route Connections	Existing Roadways Open to ATV Traffic - No Improvements Needed	50	17	14	NWNE
Road Route Connections	Existing Roadways Open to ATV Traffic - No Improvements Needed	50	17	23	NENE
Road Route Connections	Existing Roadways Open to ATV Traffic - No Improvements Needed	50	17	24	NENE
Road Route Connections	Existing Roadways Open to ATV Traffic - No Improvements Needed	50	17	24	NENW

Attachment A2: Public Land Survey 1/4, 1/4 Section, Township, Range

Trail Group	Trail Route Category	Township	Range	Section	QQ ID
Road Route Connections	Existing Roadways Open to ATV Traffic - No Improvements Needed	50	17	24	NWNE
Road Route Connections	Existing Roadways Open to ATV Traffic - No Improvements Needed	50	17	24	NWNW
Road Route Connections	Existing Roadways Open to ATV Traffic - No Improvements Needed	50	17	34	NESE
Road Route Connections	Existing Roadways Open to ATV Traffic - No Improvements Needed	50	17	34	SESE
Road Route Connections	Existing Roadways Open to ATV Traffic - No Improvements Needed	50	17	35	NENE
Road Route Connections	Existing Roadways Open to ATV Traffic - No Improvements Needed	50	17	35	NWNE
Road Route Connections	Existing Roadways Open to ATV Traffic - No Improvements Needed	50	17	36	NENE
Road Route Connections	Existing Roadways Open to ATV Traffic - No Improvements Needed	50	17	36	NENW
Road Route Connections	Existing Roadways Open to ATV Traffic - No Improvements Needed	50	17	36	NESE
Road Route Connections	Existing Roadways Open to ATV Traffic - No Improvements Needed	50	17	36	NWNE
Road Route Connections	Existing Roadways Open to ATV Traffic - No Improvements Needed	50	17	36	NWNW
Road Route Connections	Existing Roadways Open to ATV Traffic - No Improvements Needed	50	17	36	SENE
Road Route Connections	Existing Roadways Open to ATV Traffic - No Improvements Needed	50	17	36	SESE
Road Route Connections	Existing Roadways Open to ATV Traffic - No Improvements Needed	50	18	6	SWNE
Road Route Connections	Existing Roadways Open to ATV Traffic - No Improvements Needed	50	18	6	Gov. Lot 2
Road Route Connections	Existing Roadways Open to ATV Traffic - No Improvements Needed	50	18	6	Gov. Lot 3
Road Route Connections	Existing Roadways Open to ATV Traffic - No Improvements Needed	50	19	1	NWSW
Road Route Connections	Existing Roadways Open to ATV Traffic - No Improvements Needed	50	19	1	SWSW
Road Route Connections	Existing Roadways Open to ATV Traffic - No Improvements Needed	50	19	2	NESE
Road Route Connections	Existing Roadways Open to ATV Traffic - No Improvements Needed	50	19	2	SENE
Road Route Connections	Existing Roadways Open to ATV Traffic - No Improvements Needed	50	19	2	SWSW
Road Route Connections	Existing Roadways Open to ATV Traffic - No Improvements Needed	50	19	2	Gov. Lot 1
Road Route Connections	Existing Roadways Open to ATV Traffic - No Improvements Needed	50	19	3	NESE
Road Route Connections	Existing Roadways Open to ATV Traffic - No Improvements Needed	50	19	3	SENE
Road Route Connections	Existing Roadways Open to ATV Traffic - No Improvements Needed	50	19	3	SESE
Road Route Connections	Existing Roadways Open to ATV Traffic - No Improvements Needed	50	19	3	Gov. Lot 1
Road Route Connections	Existing Roadways Open to ATV Traffic - No Improvements Needed	50	19	10	NESE
Road Route Connections	Existing Roadways Open to ATV Traffic - No Improvements Needed	50	19	10	SENE
Road Route Connections	Existing Roadways Open to ATV Traffic - No Improvements Needed	50	19	10	SESE
Road Route Connections	Existing Roadways Open to ATV Traffic - No Improvements Needed	50	19	11	NENE
Road Route Connections	Existing Roadways Open to ATV Traffic - No Improvements Needed	50	19	11	NWNW
Road Route Connections	Existing Roadways Open to ATV Traffic - No Improvements Needed	50	19	11	SENE
Road Route Connections	Existing Roadways Open to ATV Traffic - No Improvements Needed	50	19	11	SWNW
Road Route Connections	Existing Roadways Open to ATV Traffic - No Improvements Needed	50	19	12	NWNW
Road Route Connections	Existing Roadways Open to ATV Traffic - No Improvements Needed	50	19	12	NWSW
Road Route Connections	Existing Roadways Open to ATV Traffic - No Improvements Needed	50	19	12	SWNW
Road Route Connections	Existing Roadways Open to ATV Traffic - No Improvements Needed	50	19	12	SWSW
Road Route Connections	Existing Roadways Open to ATV Traffic - No Improvements Needed	51	15	30	SENE
Road Route Connections	Existing Roadways Open to ATV Traffic - No Improvements Needed	51	15	30	SENW
Road Route Connections	Existing Roadways Open to ATV Traffic - No Improvements Needed	51	15	30	Gov. Lot 1
Road Route Connections	Existing Roadways Open to ATV Traffic - No Improvements Needed	51	15	30	Gov. Lot 2
Road Route Connections	Existing Roadways Open to ATV Traffic - No Improvements Needed	51	15	30	Gov. Lot 3
Road Route Connections	Existing Roadways Open to ATV Traffic - No Improvements Needed	51	16	2	SWSW
Road Route Connections	Existing Roadways Open to ATV Traffic - No Improvements Needed	51	16	2	Gov. Lot 4
Road Route Connections	Existing Roadways Open to ATV Traffic - No Improvements Needed	51	16	3	NESE
Road Route Connections	Existing Roadways Open to ATV Traffic - No Improvements Needed	51	16	3	SENE
Road Route Connections	Existing Roadways Open to ATV Traffic - No Improvements Needed	51	16	3	SESE
Road Route Connections	Existing Roadways Open to ATV Traffic - No Improvements Needed	51	16	3	Gov. Lot 1
Road Route Connections	Existing Roadways Open to ATV Traffic - No Improvements Needed	51	16	11	NWNW
Road Route Connections	Existing Roadways Open to ATV Traffic - No Improvements Needed	51	16	11	NWSW
Road Route Connections	Existing Roadways Open to ATV Traffic - No Improvements Needed	51	16	11	SWNW
Road Route Connections	Existing Roadways Open to ATV Traffic - No Improvements Needed	51	16	11	SWSW

Attachment A2: Public Land Survey 1/4, 1/4 Section, Township, Range

Trail Group	Trail Route Category	Township	Range	Section	QQ ID
Road Route Connections	Existing Roadways Open to ATV Traffic - No Improvements Needed	51	16	14	NWNW
Road Route Connections	Existing Roadways Open to ATV Traffic - No Improvements Needed	51	16	14	NWSW
Road Route Connections	Existing Roadways Open to ATV Traffic - No Improvements Needed	51	16	14	SWNW
Road Route Connections	Existing Roadways Open to ATV Traffic - No Improvements Needed	51	16	14	SWSW
Road Route Connections	Existing Roadways Open to ATV Traffic - No Improvements Needed	51	16	15	NESE
Road Route Connections	Existing Roadways Open to ATV Traffic - No Improvements Needed	51	16	15	SENE
Road Route Connections	Existing Roadways Open to ATV Traffic - No Improvements Needed	51	16	15	SESE
Road Route Connections	Existing Roadways Open to ATV Traffic - No Improvements Needed	51	16	15	SESW
Road Route Connections	Existing Roadways Open to ATV Traffic - No Improvements Needed	51	16	15	SWSE
Road Route Connections	Existing Roadways Open to ATV Traffic - No Improvements Needed	51	16	15	SWSW
Road Route Connections	Existing Roadways Open to ATV Traffic - No Improvements Needed	51	16	16	SESE
Road Route Connections	Existing Roadways Open to ATV Traffic - No Improvements Needed	51	16	16	SESW
Road Route Connections	Existing Roadways Open to ATV Traffic - No Improvements Needed	51	16	16	SWSE
Road Route Connections	Existing Roadways Open to ATV Traffic - No Improvements Needed	51	16	16	SWSW
Road Route Connections	Existing Roadways Open to ATV Traffic - No Improvements Needed	51	16	17	SESE
Road Route Connections	Existing Roadways Open to ATV Traffic - No Improvements Needed	51	16	17	SESW
Road Route Connections	Existing Roadways Open to ATV Traffic - No Improvements Needed	51	16	17	SWSE
Road Route Connections	Existing Roadways Open to ATV Traffic - No Improvements Needed	51	16	17	SWSW
Road Route Connections	Existing Roadways Open to ATV Traffic - No Improvements Needed	51	16	18	SESE
Road Route Connections	Existing Roadways Open to ATV Traffic - No Improvements Needed	51	16	18	SESW
Road Route Connections	Existing Roadways Open to ATV Traffic - No Improvements Needed	51	16	18	SWSE
Road Route Connections	Existing Roadways Open to ATV Traffic - No Improvements Needed	51	16	18	Gov. Lot 4
Road Route Connections	Existing Roadways Open to ATV Traffic - No Improvements Needed	51	16	19	Gov. Lot 1
Road Route Connections	Existing Roadways Open to ATV Traffic - No Improvements Needed	51	16	21	NENE
Road Route Connections	Existing Roadways Open to ATV Traffic - No Improvements Needed	51	16	22	NENE
Road Route Connections	Existing Roadways Open to ATV Traffic - No Improvements Needed	51	16	22	NWNW
Road Route Connections	Existing Roadways Open to ATV Traffic - No Improvements Needed	51	16	23	NWNW
Road Route Connections	Existing Roadways Open to ATV Traffic - No Improvements Needed	51	16	23	NWSW
Road Route Connections	Existing Roadways Open to ATV Traffic - No Improvements Needed	51	16	23	SWNW
Road Route Connections	Existing Roadways Open to ATV Traffic - No Improvements Needed	51	16	23	SWSW
Road Route Connections	Existing Roadways Open to ATV Traffic - No Improvements Needed	51	16	25	NWSW
Road Route Connections	Existing Roadways Open to ATV Traffic - No Improvements Needed	51	16	25	SENE
Road Route Connections	Existing Roadways Open to ATV Traffic - No Improvements Needed	51	16	25	Gov. Lot 1
Road Route Connections	Existing Roadways Open to ATV Traffic - No Improvements Needed	51	16	25	Gov. Lot 2
Road Route Connections	Existing Roadways Open to ATV Traffic - No Improvements Needed	51	16	25	Gov. Lot 3
Road Route Connections	Existing Roadways Open to ATV Traffic - No Improvements Needed	51	16	26	NESE
Road Route Connections	Existing Roadways Open to ATV Traffic - No Improvements Needed	51	16	26	NESW
Road Route Connections	Existing Roadways Open to ATV Traffic - No Improvements Needed	51	16	26	NWNW
Road Route Connections	Existing Roadways Open to ATV Traffic - No Improvements Needed	51	16	26	NWSE
Road Route Connections	Existing Roadways Open to ATV Traffic - No Improvements Needed	51	16	26	NWSW
Road Route Connections	Existing Roadways Open to ATV Traffic - No Improvements Needed	51	16	26	SENW
Road Route Connections	Existing Roadways Open to ATV Traffic - No Improvements Needed	51	16	26	SESE
Road Route Connections	Existing Roadways Open to ATV Traffic - No Improvements Needed	51	16	26	SWNW
Road Route Connections	Existing Roadways Open to ATV Traffic - No Improvements Needed	51	16	26	SWSE
Road Route Connections	Existing Roadways Open to ATV Traffic - No Improvements Needed	51	16	26	SWSW
Road Route Connections	Existing Roadways Open to ATV Traffic - No Improvements Needed	51	16	32	SESE
Road Route Connections	Existing Roadways Open to ATV Traffic - No Improvements Needed	51	16	32	SESW
Road Route Connections	Existing Roadways Open to ATV Traffic - No Improvements Needed	51	16	32	SWSE
Road Route Connections	Existing Roadways Open to ATV Traffic - No Improvements Needed	51	16	33	SESW
Road Route Connections	Existing Roadways Open to ATV Traffic - No Improvements Needed	51	16	33	SWSE
Road Route Connections	Existing Roadways Open to ATV Traffic - No Improvements Needed	51	16	33	SWSW
Road Route Connections	Existing Roadways Open to ATV Traffic - No Improvements Needed	51	16	34	NESE

Attachment A2: Public Land Survey 1/4, 1/4 Section, Township, Range

Trail Group	Trail Route Category	Township	Range	Section	QQ ID
Road Route Connections	Existing Roadways Open to ATV Traffic - No Improvements Needed	51	16	34	SENE
Road Route Connections	Existing Roadways Open to ATV Traffic - No Improvements Needed	51	16	34	SESE
Road Route Connections	Existing Roadways Open to ATV Traffic - No Improvements Needed	51	16	34	Gov. Lot 1
Road Route Connections	Existing Roadways Open to ATV Traffic - No Improvements Needed	51	16	35	NENE
Road Route Connections	Existing Roadways Open to ATV Traffic - No Improvements Needed	51	16	35	NWNW
Road Route Connections	Existing Roadways Open to ATV Traffic - No Improvements Needed	51	16	36	NESE
Road Route Connections	Existing Roadways Open to ATV Traffic - No Improvements Needed	51	16	36	SESE
Road Route Connections	Existing Roadways Open to ATV Traffic - No Improvements Needed	51	16	36	SWNW
Road Route Connections	Existing Roadways Open to ATV Traffic - No Improvements Needed	51	16	36	Gov. Lot 1
Road Route Connections	Existing Roadways Open to ATV Traffic - No Improvements Needed	51	16	36	Gov. Lot 2
Road Route Connections	Existing Roadways Open to ATV Traffic - No Improvements Needed	51	16	36	Gov. Lot 3
Road Route Connections	Existing Roadways Open to ATV Traffic - No Improvements Needed	51	16	36	Gov. Lot 4
Road Route Connections	Existing Roadways Open to ATV Traffic - No Improvements Needed	51	17	4	NWSW
Road Route Connections	Existing Roadways Open to ATV Traffic - No Improvements Needed	51	17	4	SWNW
Road Route Connections	Existing Roadways Open to ATV Traffic - No Improvements Needed	51	17	4	SWSW
Road Route Connections	Existing Roadways Open to ATV Traffic - No Improvements Needed	51	17	4	Gov. Lot 4
Road Route Connections	Existing Roadways Open to ATV Traffic - No Improvements Needed	51	17	5	SESE
Road Route Connections	Existing Roadways Open to ATV Traffic - No Improvements Needed	51	17	5	SWSE
Road Route Connections	Existing Roadways Open to ATV Traffic - No Improvements Needed	51	17	7	NENE
Road Route Connections	Existing Roadways Open to ATV Traffic - No Improvements Needed	51	17	7	NENW
Road Route Connections	Existing Roadways Open to ATV Traffic - No Improvements Needed	51	17	7	NWNE
Road Route Connections	Existing Roadways Open to ATV Traffic - No Improvements Needed	51	17	7	Gov. Lot 1
Road Route Connections	Existing Roadways Open to ATV Traffic - No Improvements Needed	51	17	8	NENW
Road Route Connections	Existing Roadways Open to ATV Traffic - No Improvements Needed	51	17	8	NWNE
Road Route Connections	Existing Roadways Open to ATV Traffic - No Improvements Needed	51	17	8	NWNW
Road Route Connections	Existing Roadways Open to ATV Traffic - No Improvements Needed	51	17	8	NWSE
Road Route Connections	Existing Roadways Open to ATV Traffic - No Improvements Needed	51	17	8	SWNE
Road Route Connections	Existing Roadways Open to ATV Traffic - No Improvements Needed	51	17	8	SWSE
Road Route Connections	Existing Roadways Open to ATV Traffic - No Improvements Needed	51	17	9	NENW
Road Route Connections	Existing Roadways Open to ATV Traffic - No Improvements Needed	51	17	9	NWNE
Road Route Connections	Existing Roadways Open to ATV Traffic - No Improvements Needed	51	17	9	NWNW
Road Route Connections	Existing Roadways Open to ATV Traffic - No Improvements Needed	51	17	9	Gov. Lot 1
Road Route Connections	Existing Roadways Open to ATV Traffic - No Improvements Needed	51	17	9	Gov. Lot 2
Road Route Connections	Existing Roadways Open to ATV Traffic - No Improvements Needed	51	17	9	Gov. Lot 99
Road Route Connections	Existing Roadways Open to ATV Traffic - No Improvements Needed	51	17	10	NENE
Road Route Connections	Existing Roadways Open to ATV Traffic - No Improvements Needed	51	17	10	NENW
Road Route Connections	Existing Roadways Open to ATV Traffic - No Improvements Needed	51	17	10	NWNE
Road Route Connections	Existing Roadways Open to ATV Traffic - No Improvements Needed	51	17	10	Gov. Lot 1
Road Route Connections	Existing Roadways Open to ATV Traffic - No Improvements Needed	51	17	11	NENE
Road Route Connections	Existing Roadways Open to ATV Traffic - No Improvements Needed	51	17	11	NENW
Road Route Connections	Existing Roadways Open to ATV Traffic - No Improvements Needed	51	17	11	NWNE
Road Route Connections	Existing Roadways Open to ATV Traffic - No Improvements Needed	51	17	11	NWNW
Road Route Connections	Existing Roadways Open to ATV Traffic - No Improvements Needed	51	17	12	NENW
Road Route Connections	Existing Roadways Open to ATV Traffic - No Improvements Needed	51	17	12	NWNE
Road Route Connections	Existing Roadways Open to ATV Traffic - No Improvements Needed	51	17	12	NWNW
Road Route Connections	Existing Roadways Open to ATV Traffic - No Improvements Needed	51	17	15	SESW
Road Route Connections	Existing Roadways Open to ATV Traffic - No Improvements Needed	51	17	15	SWSW
Road Route Connections	Existing Roadways Open to ATV Traffic - No Improvements Needed	51	17	16	NWSE
Road Route Connections	Existing Roadways Open to ATV Traffic - No Improvements Needed	51	17	16	SESE
Road Route Connections	Existing Roadways Open to ATV Traffic - No Improvements Needed	51	17	16	SWSE
Road Route Connections	Existing Roadways Open to ATV Traffic - No Improvements Needed	51	17	16	Gov. Lot 3
Road Route Connections	Existing Roadways Open to ATV Traffic - No Improvements Needed	51	17	16	Gov. Lot 6

Attachment A2: Public Land Survey 1/4, 1/4 Section, Township, Range

Trail Group	Trail Route Category	Township	Range	Section	QQ ID
Road Route Connections	Existing Roadways Open to ATV Traffic - No Improvements Needed	51	17	16	Gov. Lot 99
Road Route Connections	Existing Roadways Open to ATV Traffic - No Improvements Needed	51	17	17	NESE
Road Route Connections	Existing Roadways Open to ATV Traffic - No Improvements Needed	51	17	17	NWNE
Road Route Connections	Existing Roadways Open to ATV Traffic - No Improvements Needed	51	17	17	NWSE
Road Route Connections	Existing Roadways Open to ATV Traffic - No Improvements Needed	51	17	17	SWNE
Road Route Connections	Existing Roadways Open to ATV Traffic - No Improvements Needed	51	17	17	SWSE
Road Route Connections	Existing Roadways Open to ATV Traffic - No Improvements Needed	51	17	17	Gov. Lot 1
Road Route Connections	Existing Roadways Open to ATV Traffic - No Improvements Needed	51	17	17	Gov. Lot 2
Road Route Connections	Existing Roadways Open to ATV Traffic - No Improvements Needed	51	17	17	Gov. Lot 99
Road Route Connections	Existing Roadways Open to ATV Traffic - No Improvements Needed	51	17	19	NENW
Road Route Connections	Existing Roadways Open to ATV Traffic - No Improvements Needed	51	17	19	NWNE
Road Route Connections	Existing Roadways Open to ATV Traffic - No Improvements Needed	51	17	19	Gov. Lot 1
Road Route Connections	Existing Roadways Open to ATV Traffic - No Improvements Needed	51	17	20	Gov. Lot 1
Road Route Connections	Existing Roadways Open to ATV Traffic - No Improvements Needed	51	17	21	NESW
Road Route Connections	Existing Roadways Open to ATV Traffic - No Improvements Needed	51	17	21	NWNW
Road Route Connections	Existing Roadways Open to ATV Traffic - No Improvements Needed	51	17	21	NWSW
Road Route Connections	Existing Roadways Open to ATV Traffic - No Improvements Needed	51	17	21	SESW
Road Route Connections	Proposed Route - New Construction Proposed for ATV Use	51	17	10	NENE
Road Route Connections	Proposed Route - New Construction Proposed for ATV Use	51	17	10	SENE
Road Route Connections	Proposed Route - New Construction Proposed for ATV Use	51	17	10	NESE
Road Route Connections	Proposed Route - New Construction Proposed for ATV Use	51	17	10	SESE
Road Route Connections	Proposed Route - New Construction Proposed for ATV Use	51	17	15	NENE
Road Route Connections	Proposed Route - New Construction Proposed for ATV Use	51	17	15	SENE
Road Route Connections	Proposed Route - New Construction Proposed for ATV Use	51	17	15	NESE
Road Route Connections	Proposed Route - New Construction Proposed for ATV Use	51	17	15	SESE
Road Route Connections	Proposed Route - New Construction Proposed for ATV Use	51	17	22	NENE
Road Route Connections	Proposed Route - New Construction Proposed for ATV Use	51	17	22	SENE
Road Route Connections	Proposed Route - New Construction Proposed for ATV Use	51	17	22	NESE
Road Route Connections	Proposed Route - New Construction Proposed for ATV Use	51	17	22	SESE
Road Route Connections	Proposed Route - New Construction Proposed for ATV Use	51	17	23	SWSW
Road Route Connections	Existing Roadways Open to ATV Traffic - No Improvements Needed	51	17	21	SWNW
Road Route Connections	Existing Roadways Open to ATV Traffic - No Improvements Needed	51	17	21	SWSE
Road Route Connections	Existing Roadways Open to ATV Traffic - No Improvements Needed	51	17	22	NENE
Road Route Connections	Existing Roadways Open to ATV Traffic - No Improvements Needed	51	17	22	NENW
Road Route Connections	Existing Roadways Open to ATV Traffic - No Improvements Needed	51	17	22	NWNE
Road Route Connections	Existing Roadways Open to ATV Traffic - No Improvements Needed	51	17	22	SESE
Road Route Connections	Existing Roadways Open to ATV Traffic - No Improvements Needed	51	17	23	SWSW
Road Route Connections	Existing Roadways Open to ATV Traffic - No Improvements Needed	51	17	26	NWSW
Road Route Connections	Existing Roadways Open to ATV Traffic - No Improvements Needed	51	17	27	NENE
Road Route Connections	Existing Roadways Open to ATV Traffic - No Improvements Needed	51	17	27	SENE
Road Route Connections	Existing Roadways Open to ATV Traffic - No Improvements Needed	51	17	27	NESE
Road Route Connections	Existing Roadways Open to ATV Traffic - No Improvements Needed	51	17	23	NENE
Road Route Connections	Existing Roadways Open to ATV Traffic - No Improvements Needed	51	17	23	NENW
Road Route Connections	Existing Roadways Open to ATV Traffic - No Improvements Needed	51	17	23	NWNE
Road Route Connections	Existing Roadways Open to ATV Traffic - No Improvements Needed	51	17	23	NWNW
Road Route Connections	Existing Roadways Open to ATV Traffic - No Improvements Needed	51	17	24	NENE
Road Route Connections	Existing Roadways Open to ATV Traffic - No Improvements Needed	51	17	24	NENW
Road Route Connections	Existing Roadways Open to ATV Traffic - No Improvements Needed	51	17	24	NWNE
Road Route Connections	Existing Roadways Open to ATV Traffic - No Improvements Needed	51	17	24	NWNW
Road Route Connections	Existing Roadways Open to ATV Traffic - No Improvements Needed	51	17	26	SESW
Road Route Connections	Existing Roadways Open to ATV Traffic - No Improvements Needed	51	17	26	SWSW
Road Route Connections	Existing Roadways Open to ATV Traffic - No Improvements Needed	51	17	27	SESE

Attachment A2: Public Land Survey 1/4, 1/4 Section, Township, Range

Trail Group	Trail Route Category	Township	Range	Section	QQ ID
Road Route Connections	Existing Roadways Open to ATV Traffic - No Improvements Needed	51	17	27	SESW
Road Route Connections	Existing Roadways Open to ATV Traffic - No Improvements Needed	51	17	27	SWSE
Road Route Connections	Existing Roadways Open to ATV Traffic - No Improvements Needed	51	17	27	SWSW
Road Route Connections	Existing Roadways Open to ATV Traffic - No Improvements Needed	51	17	28	NESE
Road Route Connections	Existing Roadways Open to ATV Traffic - No Improvements Needed	51	17	28	NWNE
Road Route Connections	Existing Roadways Open to ATV Traffic - No Improvements Needed	51	17	28	SENE
Road Route Connections	Existing Roadways Open to ATV Traffic - No Improvements Needed	51	17	28	SESE
Road Route Connections	Existing Roadways Open to ATV Traffic - No Improvements Needed	51	17	28	SWNE
Road Route Connections	Existing Roadways Open to ATV Traffic - No Improvements Needed	51	17	35	NENE
Road Route Connections	Existing Roadways Open to ATV Traffic - No Improvements Needed	51	17	35	NENW
Road Route Connections	Existing Roadways Open to ATV Traffic - No Improvements Needed	51	17	35	NWNE
Road Route Connections	Existing Roadways Open to ATV Traffic - No Improvements Needed	51	17	36	NESW
Road Route Connections	Existing Roadways Open to ATV Traffic - No Improvements Needed	51	17	36	NWNW
Road Route Connections	Existing Roadways Open to ATV Traffic - No Improvements Needed	51	17	36	NWSE
Road Route Connections	Existing Roadways Open to ATV Traffic - No Improvements Needed	51	17	36	NWSW
Road Route Connections	Existing Roadways Open to ATV Traffic - No Improvements Needed	51	17	36	SENW
Road Route Connections	Existing Roadways Open to ATV Traffic - No Improvements Needed	51	17	36	SESE
Road Route Connections	Existing Roadways Open to ATV Traffic - No Improvements Needed	51	17	36	SESW
Road Route Connections	Existing Roadways Open to ATV Traffic - No Improvements Needed	51	17	36	SWNW
Road Route Connections	Existing Roadways Open to ATV Traffic - No Improvements Needed	51	17	36	SWSE
Road Route Connections	Existing Roadways Open to ATV Traffic - No Improvements Needed	51	18	1	SWSW
Road Route Connections	Existing Roadways Open to ATV Traffic - No Improvements Needed	51	18	2	NWSE
Road Route Connections	Existing Roadways Open to ATV Traffic - No Improvements Needed	51	18	2	SESE
Road Route Connections	Existing Roadways Open to ATV Traffic - No Improvements Needed	51	18	2	SESW
Road Route Connections	Existing Roadways Open to ATV Traffic - No Improvements Needed	51	18	2	SWNE
Road Route Connections	Existing Roadways Open to ATV Traffic - No Improvements Needed	51	18	2	SWSE
Road Route Connections	Existing Roadways Open to ATV Traffic - No Improvements Needed	51	18	2	Gov. Lot 2
Road Route Connections	Existing Roadways Open to ATV Traffic - No Improvements Needed	51	18	2	Gov. Lot 3
Road Route Connections	Existing Roadways Open to ATV Traffic - No Improvements Needed	51	18	6	SESW
Road Route Connections	Existing Roadways Open to ATV Traffic - No Improvements Needed	51	18	6	Gov. Lot 7
Road Route Connections	Existing Roadways Open to ATV Traffic - No Improvements Needed	51	18	7	NENE
Road Route Connections	Existing Roadways Open to ATV Traffic - No Improvements Needed	51	18	7	NENW
Road Route Connections	Existing Roadways Open to ATV Traffic - No Improvements Needed	51	18	7	NWNE
Road Route Connections	Existing Roadways Open to ATV Traffic - No Improvements Needed	51	18	8	NENW
Road Route Connections	Existing Roadways Open to ATV Traffic - No Improvements Needed	51	18	8	NWNW
Road Route Connections	Existing Roadways Open to ATV Traffic - No Improvements Needed	51	18	11	NENE
Road Route Connections	Existing Roadways Open to ATV Traffic - No Improvements Needed	51	18	11	NENW
Road Route Connections	Existing Roadways Open to ATV Traffic - No Improvements Needed	51	18	11	NWNE
Road Route Connections	Existing Roadways Open to ATV Traffic - No Improvements Needed	51	18	11	SESE
Road Route Connections	Existing Roadways Open to ATV Traffic - No Improvements Needed	51	18	12	NENE
Road Route Connections	Existing Roadways Open to ATV Traffic - No Improvements Needed	51	18	12	NENW
Road Route Connections	Existing Roadways Open to ATV Traffic - No Improvements Needed	51	18	12	NWNE
Road Route Connections	Existing Roadways Open to ATV Traffic - No Improvements Needed	51	18	12	NWNW
Road Route Connections	Existing Roadways Open to ATV Traffic - No Improvements Needed	51	18	12	NWSW
Road Route Connections	Existing Roadways Open to ATV Traffic - No Improvements Needed	51	18	12	SWNW
Road Route Connections	Existing Roadways Open to ATV Traffic - No Improvements Needed	51	18	12	SWSW
Road Route Connections	Existing Roadways Open to ATV Traffic - No Improvements Needed	51	18	13	NWNW
Road Route Connections	Existing Roadways Open to ATV Traffic - No Improvements Needed	51	18	13	NWSW
Road Route Connections	Existing Roadways Open to ATV Traffic - No Improvements Needed	51	18	13	SWNW
Road Route Connections	Existing Roadways Open to ATV Traffic - No Improvements Needed	51	18	14	NESE
Road Route Connections	Existing Roadways Open to ATV Traffic - No Improvements Needed	51	18	14	SESE
Road Route Connections	Existing Roadways Open to ATV Traffic - No Improvements Needed	51	18	14	SESW

Attachment A2: Public Land Survey 1/4, 1/4 Section, Township, Range

Trail Group	Trail Route Category	Township	Range	Section	QQ ID
Road Route Connections	Existing Roadways Open to ATV Traffic - No Improvements Needed	51	18	14	SWSE
Road Route Connections	Existing Roadways Open to ATV Traffic - No Improvements Needed	51	18	22	NENE
Road Route Connections	Existing Roadways Open to ATV Traffic - No Improvements Needed	51	18	22	NESE
Road Route Connections	Existing Roadways Open to ATV Traffic - No Improvements Needed	51	18	22	NWNE
Road Route Connections	Existing Roadways Open to ATV Traffic - No Improvements Needed	51	18	22	SENE
Road Route Connections	Existing Roadways Open to ATV Traffic - No Improvements Needed	51	18	22	SESE
Road Route Connections	Existing Roadways Open to ATV Traffic - No Improvements Needed	51	18	22	SWNE
Road Route Connections	Existing Roadways Open to ATV Traffic - No Improvements Needed	51	18	23	NENE
Road Route Connections	Existing Roadways Open to ATV Traffic - No Improvements Needed	51	18	23	NENW
Road Route Connections	Existing Roadways Open to ATV Traffic - No Improvements Needed	51	18	23	NWNW
Road Route Connections	Existing Roadways Open to ATV Traffic - No Improvements Needed	51	18	24	NENE
Road Route Connections	Existing Roadways Open to ATV Traffic - No Improvements Needed	51	18	24	NENW
Road Route Connections	Existing Roadways Open to ATV Traffic - No Improvements Needed	51	18	24	NWNE
Road Route Connections	Existing Roadways Open to ATV Traffic - No Improvements Needed	51	18	24	NWNW
Road Route Connections	Existing Roadways Open to ATV Traffic - No Improvements Needed	51	18	27	NENE
Road Route Connections	Existing Roadways Open to ATV Traffic - No Improvements Needed	51	18	27	NWNE
Road Route Connections	Existing Roadways Open to ATV Traffic - No Improvements Needed	51	18	27	SWNE
Road Route Connections	Existing Roadways Open to ATV Traffic - No Improvements Needed	51	18	27	Gov. Lot 3
Road Route Connections	Existing Roadways Open to ATV Traffic - No Improvements Needed	51	18	27	Gov. Lot 5
Road Route Connections	Existing Roadways Open to ATV Traffic - No Improvements Needed	51	18	27	Gov. Lot 7
Road Route Connections	Existing Roadways Open to ATV Traffic - No Improvements Needed	51	18	27	Gov. Lot 99
Road Route Connections	Existing Roadways Open to ATV Traffic - No Improvements Needed	51	18	28	Gov. Lot 5
Road Route Connections	Existing Roadways Open to ATV Traffic - No Improvements Needed	51	18	28	Gov. Lot 6
Road Route Connections	Existing Roadways Open to ATV Traffic - No Improvements Needed	51	18	31	NENE
Road Route Connections	Existing Roadways Open to ATV Traffic - No Improvements Needed	51	18	31	NENW
Road Route Connections	Existing Roadways Open to ATV Traffic - No Improvements Needed	51	18	31	NWNE
Road Route Connections	Existing Roadways Open to ATV Traffic - No Improvements Needed	51	18	31	SESW
Road Route Connections	Existing Roadways Open to ATV Traffic - No Improvements Needed	51	18	31	SWSE
Road Route Connections	Existing Roadways Open to ATV Traffic - No Improvements Needed	51	18	31	Gov. Lot 1
Road Route Connections	Existing Roadways Open to ATV Traffic - No Improvements Needed	51	18	31	Gov. Lot 4
Road Route Connections	Existing Roadways Open to ATV Traffic - No Improvements Needed	51	18	32	NENE
Road Route Connections	Existing Roadways Open to ATV Traffic - No Improvements Needed	51	18	32	NENW
Road Route Connections	Existing Roadways Open to ATV Traffic - No Improvements Needed	51	18	32	NWNE
Road Route Connections	Existing Roadways Open to ATV Traffic - No Improvements Needed	51	18	32	NWNW
Road Route Connections	Existing Roadways Open to ATV Traffic - No Improvements Needed	51	18	33	NENW
Road Route Connections	Existing Roadways Open to ATV Traffic - No Improvements Needed	51	18	33	NWNE
Road Route Connections	Existing Roadways Open to ATV Traffic - No Improvements Needed	51	18	33	NWNW
Road Route Connections	Existing Roadways Open to ATV Traffic - No Improvements Needed	51	18	34	NENW
Road Route Connections	Existing Roadways Open to ATV Traffic - No Improvements Needed	51	18	34	NWNE
Road Route Connections	Existing Roadways Open to ATV Traffic - No Improvements Needed	51	18	34	NWNW
Road Route Connections	Existing Roadways Open to ATV Traffic - No Improvements Needed	51	19	1	SESE
Road Route Connections	Existing Roadways Open to ATV Traffic - No Improvements Needed	51	19	2	SWSW
Road Route Connections	Existing Roadways Open to ATV Traffic - No Improvements Needed	51	19	3	SESE
Road Route Connections	Existing Roadways Open to ATV Traffic - No Improvements Needed	51	19	3	SESW
Road Route Connections	Existing Roadways Open to ATV Traffic - No Improvements Needed	51	19	3	SWSE
Road Route Connections	Existing Roadways Open to ATV Traffic - No Improvements Needed	51	19	3	SWSW
Road Route Connections	Existing Roadways Open to ATV Traffic - No Improvements Needed	51	19	4	SESE
Road Route Connections	Existing Roadways Open to ATV Traffic - No Improvements Needed	51	19	4	SESW
Road Route Connections	Existing Roadways Open to ATV Traffic - No Improvements Needed	51	19	4	SWSE
Road Route Connections	Existing Roadways Open to ATV Traffic - No Improvements Needed	51	19	4	SWSW
Road Route Connections	Existing Roadways Open to ATV Traffic - No Improvements Needed	51	19	5	SESE
Road Route Connections	Existing Roadways Open to ATV Traffic - No Improvements Needed	51	19	5	SESW

Attachment A2: Public Land Survey 1/4, 1/4 Section, Township, Range

Trail Group	Trail Route Category	Township	Range	Section	QQ ID
Road Route Connections	Existing Roadways Open to ATV Traffic - No Improvements Needed	51	19	5	SWSE
Road Route Connections	Existing Roadways Open to ATV Traffic - No Improvements Needed	51	19	7	NENE
Road Route Connections	Existing Roadways Open to ATV Traffic - No Improvements Needed	51	19	7	NENW
Road Route Connections	Existing Roadways Open to ATV Traffic - No Improvements Needed	51	19	7	NWNE
Road Route Connections	Existing Roadways Open to ATV Traffic - No Improvements Needed	51	19	7	Gov. Lot 1
Road Route Connections	Existing Roadways Open to ATV Traffic - No Improvements Needed	51	19	8	NENW
Road Route Connections	Existing Roadways Open to ATV Traffic - No Improvements Needed	51	19	8	NWNW
Road Route Connections	Existing Roadways Open to ATV Traffic - No Improvements Needed	51	19	11	NENE
Road Route Connections	Existing Roadways Open to ATV Traffic - No Improvements Needed	51	19	11	NENW
Road Route Connections	Existing Roadways Open to ATV Traffic - No Improvements Needed	51	19	11	NWNE
Road Route Connections	Existing Roadways Open to ATV Traffic - No Improvements Needed	51	19	11	NWNW
Road Route Connections	Existing Roadways Open to ATV Traffic - No Improvements Needed	51	19	12	NENE
Road Route Connections	Existing Roadways Open to ATV Traffic - No Improvements Needed	51	19	12	NENW
Road Route Connections	Existing Roadways Open to ATV Traffic - No Improvements Needed	51	19	12	NWNE
Road Route Connections	Existing Roadways Open to ATV Traffic - No Improvements Needed	51	19	12	NWNW
Road Route Connections	Existing Roadways Open to ATV Traffic - No Improvements Needed	51	19	26	SESW
Road Route Connections	Existing Roadways Open to ATV Traffic - No Improvements Needed	51	19	26	SWSW
Road Route Connections	Existing Roadways Open to ATV Traffic - No Improvements Needed	51	19	34	NENE
Road Route Connections	Existing Roadways Open to ATV Traffic - No Improvements Needed	51	19	34	NESE
Road Route Connections	Existing Roadways Open to ATV Traffic - No Improvements Needed	51	19	34	SENE
Road Route Connections	Existing Roadways Open to ATV Traffic - No Improvements Needed	51	19	34	SESE
Road Route Connections	Existing Roadways Open to ATV Traffic - No Improvements Needed	51	19	35	NENE
Road Route Connections	Existing Roadways Open to ATV Traffic - No Improvements Needed	51	19	35	NENW
Road Route Connections	Existing Roadways Open to ATV Traffic - No Improvements Needed	51	19	35	NWNE
Road Route Connections	Existing Roadways Open to ATV Traffic - No Improvements Needed	51	19	35	NWNW
Road Route Connections	Existing Roadways Open to ATV Traffic - No Improvements Needed	51	19	35	SESE
Road Route Connections	Existing Roadways Open to ATV Traffic - No Improvements Needed	51	19	36	NENE
Road Route Connections	Existing Roadways Open to ATV Traffic - No Improvements Needed	51	19	36	NENW
Road Route Connections	Existing Roadways Open to ATV Traffic - No Improvements Needed	51	19	36	NESE
Road Route Connections	Existing Roadways Open to ATV Traffic - No Improvements Needed	51	19	36	NWNE
Road Route Connections	Existing Roadways Open to ATV Traffic - No Improvements Needed	51	19	36	NWNW
Road Route Connections	Existing Roadways Open to ATV Traffic - No Improvements Needed	51	19	36	SENE
Road Route Connections	Existing Roadways Open to ATV Traffic - No Improvements Needed	51	19	36	SESE
Road Route Connections	Existing Roadways Open to ATV Traffic - No Improvements Needed	51	19	36	SESW
Road Route Connections	Existing Roadways Open to ATV Traffic - No Improvements Needed	51	19	36	SWSE
Road Route Connections	Existing Roadways Open to ATV Traffic - No Improvements Needed	51	19	36	SWSW
Road Route Connections	Existing Roadways Open to ATV Traffic - No Improvements Needed	51	20	2	SESW
Road Route Connections	Existing Roadways Open to ATV Traffic - No Improvements Needed	51	20	2	SWSW
Road Route Connections	Existing Roadways Open to ATV Traffic - No Improvements Needed	51	20	11	NENE
Road Route Connections	Existing Roadways Open to ATV Traffic - No Improvements Needed	51	20	11	NENW
Road Route Connections	Existing Roadways Open to ATV Traffic - No Improvements Needed	51	20	11	NWNE
Road Route Connections	Existing Roadways Open to ATV Traffic - No Improvements Needed	51	20	12	NENE
Road Route Connections	Existing Roadways Open to ATV Traffic - No Improvements Needed	51	20	12	NENW
Road Route Connections	Existing Roadways Open to ATV Traffic - No Improvements Needed	51	20	12	NWNE
Road Route Connections	Existing Roadways Open to ATV Traffic - No Improvements Needed	51	20	12	NWNW
Road Route Connections	Existing Roadways Open to ATV Traffic - No Improvements Needed	52	13	18	SESE
Road Route Connections	Existing Roadways Open to ATV Traffic - No Improvements Needed	52	13	19	NENE
Road Route Connections	Existing Roadways Open to ATV Traffic - No Improvements Needed	52	13	19	NENW
Road Route Connections	Existing Roadways Open to ATV Traffic - No Improvements Needed	52	13	19	NWNE
Road Route Connections	Existing Roadways Open to ATV Traffic - No Improvements Needed	52	13	19	NWNW
Road Route Connections	Existing Roadways Open to ATV Traffic - No Improvements Needed	52	14	17	SWSW
Road Route Connections	Existing Roadways Open to ATV Traffic - No Improvements Needed	52	14	18	SESE

Attachment A2: Public Land Survey 1/4, 1/4 Section, Township, Range

Trail Group	Trail Route Category	Township	Range	Section	QQ ID
Road Route Connections	Existing Roadways Open to ATV Traffic - No Improvements Needed	52	14	19	NENE
Road Route Connections	Existing Roadways Open to ATV Traffic - No Improvements Needed	52	14	19	NESE
Road Route Connections	Existing Roadways Open to ATV Traffic - No Improvements Needed	52	14	19	SENE
Road Route Connections	Existing Roadways Open to ATV Traffic - No Improvements Needed	52	14	19	SESW
Road Route Connections	Existing Roadways Open to ATV Traffic - No Improvements Needed	52	14	19	SWSW
Road Route Connections	Existing Roadways Open to ATV Traffic - No Improvements Needed	52	14	20	NENE
Road Route Connections	Existing Roadways Open to ATV Traffic - No Improvements Needed	52	14	20	NENW
Road Route Connections	Existing Roadways Open to ATV Traffic - No Improvements Needed	52	14	20	NWNE
Road Route Connections	Existing Roadways Open to ATV Traffic - No Improvements Needed	52	14	20	NWNW
Road Route Connections	Existing Roadways Open to ATV Traffic - No Improvements Needed	52	14	20	NWSW
Road Route Connections	Existing Roadways Open to ATV Traffic - No Improvements Needed	52	14	20	SWSW
Road Route Connections	Existing Roadways Open to ATV Traffic - No Improvements Needed	52	14	21	NENE
Road Route Connections	Existing Roadways Open to ATV Traffic - No Improvements Needed	52	14	21	NENW
Road Route Connections	Existing Roadways Open to ATV Traffic - No Improvements Needed	52	14	21	NWNE
Road Route Connections	Existing Roadways Open to ATV Traffic - No Improvements Needed	52	14	21	NWNW
Road Route Connections	Existing Roadways Open to ATV Traffic - No Improvements Needed	52	14	22	NENE
Road Route Connections	Existing Roadways Open to ATV Traffic - No Improvements Needed	52	14	22	NENW
Road Route Connections	Existing Roadways Open to ATV Traffic - No Improvements Needed	52	14	22	NWNE
Road Route Connections	Existing Roadways Open to ATV Traffic - No Improvements Needed	52	14	22	NWNW
Road Route Connections	Existing Roadways Open to ATV Traffic - No Improvements Needed	52	14	23	NENE
Road Route Connections	Existing Roadways Open to ATV Traffic - No Improvements Needed	52	14	23	NENW
Road Route Connections	Existing Roadways Open to ATV Traffic - No Improvements Needed	52	14	23	NWNE
Road Route Connections	Existing Roadways Open to ATV Traffic - No Improvements Needed	52	14	23	NWNW
Road Route Connections	Existing Roadways Open to ATV Traffic - No Improvements Needed	52	14	24	NENE
Road Route Connections	Existing Roadways Open to ATV Traffic - No Improvements Needed	52	14	24	NENW
Road Route Connections	Existing Roadways Open to ATV Traffic - No Improvements Needed	52	14	24	NWNE
Road Route Connections	Existing Roadways Open to ATV Traffic - No Improvements Needed	52	14	24	NWNW
Road Route Connections	Existing Roadways Open to ATV Traffic - No Improvements Needed	52	14	29	NWNW
Road Route Connections	Existing Roadways Open to ATV Traffic - No Improvements Needed	52	14	29	SWNW
Road Route Connections	Existing Roadways Open to ATV Traffic - No Improvements Needed	52	14	30	NENE
Road Route Connections	Existing Roadways Open to ATV Traffic - No Improvements Needed	52	14	30	NENW
Road Route Connections	Existing Roadways Open to ATV Traffic - No Improvements Needed	52	14	30	NESE
Road Route Connections	Existing Roadways Open to ATV Traffic - No Improvements Needed	52	14	30	NWNE
Road Route Connections	Existing Roadways Open to ATV Traffic - No Improvements Needed	52	14	30	NWNW
Road Route Connections	Existing Roadways Open to ATV Traffic - No Improvements Needed	52	14	30	SENE
Road Route Connections	Existing Roadways Open to ATV Traffic - No Improvements Needed	52	14	30	SESE
Road Route Connections	Existing Roadways Open to ATV Traffic - No Improvements Needed	52	14	30	SWSE
Road Route Connections	Existing Roadways Open to ATV Traffic - No Improvements Needed	52	14	31	NENE
Road Route Connections	Existing Roadways Open to ATV Traffic - No Improvements Needed	52	14	31	NENW
Road Route Connections	Existing Roadways Open to ATV Traffic - No Improvements Needed	52	14	31	NWNE
Road Route Connections	Existing Roadways Open to ATV Traffic - No Improvements Needed	52	14	31	NWNW
Road Route Connections	Existing Roadways Open to ATV Traffic - No Improvements Needed	52	15	7	SESE
Road Route Connections	Existing Roadways Open to ATV Traffic - No Improvements Needed	52	15	8	SESW
Road Route Connections	Existing Roadways Open to ATV Traffic - No Improvements Needed	52	15	8	SWSW
Road Route Connections	Existing Roadways Open to ATV Traffic - No Improvements Needed	52	15	16	NENW
Road Route Connections	Existing Roadways Open to ATV Traffic - No Improvements Needed	52	15	16	NWNE
Road Route Connections	Existing Roadways Open to ATV Traffic - No Improvements Needed	52	15	16	NWNW
Road Route Connections	Existing Roadways Open to ATV Traffic - No Improvements Needed	52	15	16	SWNE
Road Route Connections	Existing Roadways Open to ATV Traffic - No Improvements Needed	52	15	16	Gov. Lot 1
Road Route Connections	Existing Roadways Open to ATV Traffic - No Improvements Needed	52	15	16	Gov. Lot 2
Road Route Connections	Existing Roadways Open to ATV Traffic - No Improvements Needed	52	15	16	Gov. Lot 8
Road Route Connections	Existing Roadways Open to ATV Traffic - No Improvements Needed	52	15	16	Gov. Lot 99

Attachment A2: Public Land Survey 1/4, 1/4 Section, Township, Range

Trail Group	Trail Route Category	Township	Range	Section	QQ ID
Road Route Connections	Existing Roadways Open to ATV Traffic - No Improvements Needed	52	15	17	NENE
Road Route Connections	Existing Roadways Open to ATV Traffic - No Improvements Needed	52	15	17	NENW
Road Route Connections	Existing Roadways Open to ATV Traffic - No Improvements Needed	52	15	17	NWNE
Road Route Connections	Existing Roadways Open to ATV Traffic - No Improvements Needed	52	15	18	NENE
Road Route Connections	Existing Roadways Open to ATV Traffic - No Improvements Needed	52	15	18	NENW
Road Route Connections	Existing Roadways Open to ATV Traffic - No Improvements Needed	52	15	18	NWNE
Road Route Connections	Existing Roadways Open to ATV Traffic - No Improvements Needed	52	15	18	NWNW
Road Route Connections	Existing Roadways Open to ATV Traffic - No Improvements Needed	52	15	21	NENE
Road Route Connections	Existing Roadways Open to ATV Traffic - No Improvements Needed	52	15	21	SESE
Road Route Connections	Existing Roadways Open to ATV Traffic - No Improvements Needed	52	15	22	NESE
Road Route Connections	Existing Roadways Open to ATV Traffic - No Improvements Needed	52	15	22	NWNW
Road Route Connections	Existing Roadways Open to ATV Traffic - No Improvements Needed	52	15	22	NWSE
Road Route Connections	Existing Roadways Open to ATV Traffic - No Improvements Needed	52	15	22	NWSW
Road Route Connections	Existing Roadways Open to ATV Traffic - No Improvements Needed	52	15	22	SENW
Road Route Connections	Existing Roadways Open to ATV Traffic - No Improvements Needed	52	15	22	SESE
Road Route Connections	Existing Roadways Open to ATV Traffic - No Improvements Needed	52	15	22	SWNE
Road Route Connections	Existing Roadways Open to ATV Traffic - No Improvements Needed	52	15	22	SWNW
Road Route Connections	Existing Roadways Open to ATV Traffic - No Improvements Needed	52	15	22	SWSW
Road Route Connections	Existing Roadways Open to ATV Traffic - No Improvements Needed	52	15	23	NWSW
Road Route Connections	Existing Roadways Open to ATV Traffic - No Improvements Needed	52	15	23	SWSW
Road Route Connections	Existing Roadways Open to ATV Traffic - No Improvements Needed	52	15	24	SESE
Road Route Connections	Existing Roadways Open to ATV Traffic - No Improvements Needed	52	15	24	SESW
Road Route Connections	Existing Roadways Open to ATV Traffic - No Improvements Needed	52	15	24	SWSE
Road Route Connections	Existing Roadways Open to ATV Traffic - No Improvements Needed	52	15	24	SWSW
Road Route Connections	Existing Roadways Open to ATV Traffic - No Improvements Needed	52	15	25	NENE
Road Route Connections	Existing Roadways Open to ATV Traffic - No Improvements Needed	52	15	25	NESW
Road Route Connections	Existing Roadways Open to ATV Traffic - No Improvements Needed	52	15	25	NWNE
Road Route Connections	Existing Roadways Open to ATV Traffic - No Improvements Needed	52	15	25	NWNW
Road Route Connections	Existing Roadways Open to ATV Traffic - No Improvements Needed	52	15	25	SENW
Road Route Connections	Existing Roadways Open to ATV Traffic - No Improvements Needed	52	15	25	SESE
Road Route Connections	Existing Roadways Open to ATV Traffic - No Improvements Needed	52	15	25	SESW
Road Route Connections	Existing Roadways Open to ATV Traffic - No Improvements Needed	52	15	25	SWNE
Road Route Connections	Existing Roadways Open to ATV Traffic - No Improvements Needed	52	15	25	SWSE
Road Route Connections	Existing Roadways Open to ATV Traffic - No Improvements Needed	52	15	26	NENE
Road Route Connections	Existing Roadways Open to ATV Traffic - No Improvements Needed	52	15	26	NENW
Road Route Connections	Existing Roadways Open to ATV Traffic - No Improvements Needed	52	15	26	NWNE
Road Route Connections	Existing Roadways Open to ATV Traffic - No Improvements Needed	52	15	26	NWNW
Road Route Connections	Existing Roadways Open to ATV Traffic - No Improvements Needed	52	15	26	NWSW
Road Route Connections	Existing Roadways Open to ATV Traffic - No Improvements Needed	52	15	26	SWSW
Road Route Connections	Existing Roadways Open to ATV Traffic - No Improvements Needed	52	15	27	NENE
Road Route Connections	Existing Roadways Open to ATV Traffic - No Improvements Needed	52	15	27	NESE
Road Route Connections	Existing Roadways Open to ATV Traffic - No Improvements Needed	52	15	27	SENE
Road Route Connections	Existing Roadways Open to ATV Traffic - No Improvements Needed	52	15	28	NENE
Road Route Connections	Existing Roadways Open to ATV Traffic - No Improvements Needed	52	15	28	Gov. Lot 1
Road Route Connections	Existing Roadways Open to ATV Traffic - No Improvements Needed	52	15	28	Gov. Lot 2
Road Route Connections	Existing Roadways Open to ATV Traffic - No Improvements Needed	52	15	28	Gov. Lot 3
Road Route Connections	Existing Roadways Open to ATV Traffic - No Improvements Needed	52	15	28	Gov. Lot 4
Road Route Connections	Existing Roadways Open to ATV Traffic - No Improvements Needed	52	15	28	Gov. Lot 99
Road Route Connections	Existing Roadways Open to ATV Traffic - No Improvements Needed	52	15	29	NESW
Road Route Connections	Existing Roadways Open to ATV Traffic - No Improvements Needed	52	15	29	NWSW
Road Route Connections	Existing Roadways Open to ATV Traffic - No Improvements Needed	52	15	29	SENW
Road Route Connections	Existing Roadways Open to ATV Traffic - No Improvements Needed	52	15	29	SWNE

Attachment A2: Public Land Survey 1/4, 1/4 Section, Township, Range

Trail Group	Trail Route Category	Township	Range	Section	QQ ID
Road Route Connections	Existing Roadways Open to ATV Traffic - No Improvements Needed	52	15	29	Gov. Lot 1
Road Route Connections	Existing Roadways Open to ATV Traffic - No Improvements Needed	52	15	34	NENE
Road Route Connections	Existing Roadways Open to ATV Traffic - No Improvements Needed	52	15	35	NWNW
Road Route Connections	Existing Roadways Open to ATV Traffic - No Improvements Needed	52	15	36	NENE
Road Route Connections	Existing Roadways Open to ATV Traffic - No Improvements Needed	52	16	13	NENE
Road Route Connections	Existing Roadways Open to ATV Traffic - No Improvements Needed	52	16	13	Gov. Lot 1
Road Route Connections	Existing Roadways Open to ATV Traffic - No Improvements Needed	52	16	13	Gov. Lot 2
Road Route Connections	Existing Roadways Open to ATV Traffic - No Improvements Needed	52	16	13	Gov. Lot 3
Road Route Connections	Existing Roadways Open to ATV Traffic - No Improvements Needed	52	16	14	NESE
Road Route Connections	Existing Roadways Open to ATV Traffic - No Improvements Needed	52	16	14	NWSE
Road Route Connections	Existing Roadways Open to ATV Traffic - No Improvements Needed	52	16	14	SWSE
Road Route Connections	Existing Roadways Open to ATV Traffic - No Improvements Needed	52	16	14	Gov. Lot 2
Road Route Connections	Existing Roadways Open to ATV Traffic - No Improvements Needed	52	16	23	NENW
Road Route Connections	Existing Roadways Open to ATV Traffic - No Improvements Needed	52	16	23	NESW
Road Route Connections	Existing Roadways Open to ATV Traffic - No Improvements Needed	52	16	23	NWNE
Road Route Connections	Existing Roadways Open to ATV Traffic - No Improvements Needed	52	16	23	SENW
Road Route Connections	Existing Roadways Open to ATV Traffic - No Improvements Needed	52	16	23	SWNW
Road Route Connections	Existing Roadways Open to ATV Traffic - No Improvements Needed	52	16	23	Gov. Lot 2
Road Route Connections	Existing Roadways Open to ATV Traffic - No Improvements Needed	52	16	23	Gov. Lot 4
Road Route Connections	Existing Roadways Open to ATV Traffic - No Improvements Needed	52	16	26	NENW
Road Route Connections	Existing Roadways Open to ATV Traffic - No Improvements Needed	52	16	26	SWNW
Road Route Connections	Existing Roadways Open to ATV Traffic - No Improvements Needed	52	16	26	Gov. Lot 4
Road Route Connections	Existing Roadways Open to ATV Traffic - No Improvements Needed	52	16	26	Gov. Lot 5
Road Route Connections	Existing Roadways Open to ATV Traffic - No Improvements Needed	52	16	26	Gov. Lot 9
Road Route Connections	Existing Roadways Open to ATV Traffic - No Improvements Needed	52	16	26	Gov. Lot 99
Road Route Connections	Existing Roadways Open to ATV Traffic - No Improvements Needed	52	16	35	NWNW
Road Route Connections	Existing Roadways Open to ATV Traffic - No Improvements Needed	52	16	35	NWSW
Road Route Connections	Existing Roadways Open to ATV Traffic - No Improvements Needed	52	16	35	SWNW
Road Route Connections	Existing Roadways Open to ATV Traffic - No Improvements Needed	52	16	35	SWSW
Road Route Connections	Existing Roadways Open to ATV Traffic - No Improvements Needed	52	17	3	NWSW
Road Route Connections	Existing Roadways Open to ATV Traffic - No Improvements Needed	52	17	3	SWNW
Road Route Connections	Existing Roadways Open to ATV Traffic - No Improvements Needed	52	17	3	Gov. Lot 1
Road Route Connections	Existing Roadways Open to ATV Traffic - No Improvements Needed	52	17	3	Gov. Lot 2
Road Route Connections	Existing Roadways Open to ATV Traffic - No Improvements Needed	52	17	3	Gov. Lot 4
Road Route Connections	Existing Roadways Open to ATV Traffic - No Improvements Needed	52	17	4	NESE
Road Route Connections	Existing Roadways Open to ATV Traffic - No Improvements Needed	52	17	4	SESE
Road Route Connections	Existing Roadways Open to ATV Traffic - No Improvements Needed	52	17	4	SESW
Road Route Connections	Existing Roadways Open to ATV Traffic - No Improvements Needed	52	17	4	SWSE
Road Route Connections	Existing Roadways Open to ATV Traffic - No Improvements Needed	52	17	4	SWSW
Road Route Connections	Existing Roadways Open to ATV Traffic - No Improvements Needed	52	17	7	SESE
Road Route Connections	Existing Roadways Open to ATV Traffic - No Improvements Needed	52	17	8	SESE
Road Route Connections	Existing Roadways Open to ATV Traffic - No Improvements Needed	52	17	8	SESW
Road Route Connections	Existing Roadways Open to ATV Traffic - No Improvements Needed	52	17	8	SWSE
Road Route Connections	Existing Roadways Open to ATV Traffic - No Improvements Needed	52	17	8	SWSW
Road Route Connections	Existing Roadways Open to ATV Traffic - No Improvements Needed	52	17	9	NWNW
Road Route Connections	Existing Roadways Open to ATV Traffic - No Improvements Needed	52	17	9	NWSW
Road Route Connections	Existing Roadways Open to ATV Traffic - No Improvements Needed	52	17	9	SESE
Road Route Connections	Existing Roadways Open to ATV Traffic - No Improvements Needed	52	17	9	SESW
Road Route Connections	Existing Roadways Open to ATV Traffic - No Improvements Needed	52	17	9	SWNW
Road Route Connections	Existing Roadways Open to ATV Traffic - No Improvements Needed	52	17	9	SWSE
Road Route Connections	Existing Roadways Open to ATV Traffic - No Improvements Needed	52	17	9	SWSW
Road Route Connections	Existing Roadways Open to ATV Traffic - No Improvements Needed	52	17	10	SESE

Attachment A2: Public Land Survey 1/4, 1/4 Section, Township, Range

Trail Group	Trail Route Category	Township	Range	Section	QQ ID
Road Route Connections	Existing Roadways Open to ATV Traffic - No Improvements Needed	52	17	10	SESW
Road Route Connections	Existing Roadways Open to ATV Traffic - No Improvements Needed	52	17	10	SWSE
Road Route Connections	Existing Roadways Open to ATV Traffic - No Improvements Needed	52	17	10	SWSW
Road Route Connections	Existing Roadways Open to ATV Traffic - No Improvements Needed	52	17	11	SWSW
Road Route Connections	Existing Roadways Open to ATV Traffic - No Improvements Needed	52	17	18	NENE
Road Route Connections	Existing Roadways Open to ATV Traffic - No Improvements Needed	52	17	18	NENW
Road Route Connections	Existing Roadways Open to ATV Traffic - No Improvements Needed	52	17	18	NWNE
Road Route Connections	Existing Roadways Open to ATV Traffic - No Improvements Needed	52	17	18	Gov. Lot 1
Road Route Connections	Existing Roadways Open to ATV Traffic - No Improvements Needed	52	17	18	Gov. Lot 4
Road Route Connections	Existing Roadways Open to ATV Traffic - No Improvements Needed	52	17	19	Gov. Lot 4
Road Route Connections	Existing Roadways Open to ATV Traffic - No Improvements Needed	52	17	19	Gov. Lot 7
Road Route Connections	Existing Roadways Open to ATV Traffic - No Improvements Needed	52	17	26	NWSW
Road Route Connections	Existing Roadways Open to ATV Traffic - No Improvements Needed	52	17	26	Gov. Lot 3
Road Route Connections	Existing Roadways Open to ATV Traffic - No Improvements Needed	52	17	26	Gov. Lot 7
Road Route Connections	Existing Roadways Open to ATV Traffic - No Improvements Needed	52	17	27	NESE
Road Route Connections	Existing Roadways Open to ATV Traffic - No Improvements Needed	52	17	27	NESW
Road Route Connections	Existing Roadways Open to ATV Traffic - No Improvements Needed	52	17	27	NWSE
Road Route Connections	Existing Roadways Open to ATV Traffic - No Improvements Needed	52	17	27	NWSW
Road Route Connections	Existing Roadways Open to ATV Traffic - No Improvements Needed	52	17	27	SWNW
Road Route Connections	Existing Roadways Open to ATV Traffic - No Improvements Needed	52	17	28	NWSW
Road Route Connections	Existing Roadways Open to ATV Traffic - No Improvements Needed	52	17	28	SENE
Road Route Connections	Existing Roadways Open to ATV Traffic - No Improvements Needed	52	17	28	SENW
Road Route Connections	Existing Roadways Open to ATV Traffic - No Improvements Needed	52	17	28	SWNE
Road Route Connections	Existing Roadways Open to ATV Traffic - No Improvements Needed	52	17	28	SWNW
Road Route Connections	Existing Roadways Open to ATV Traffic - No Improvements Needed	52	17	28	SWSW
Road Route Connections	Existing Roadways Open to ATV Traffic - No Improvements Needed	52	17	29	NESE
Road Route Connections	Existing Roadways Open to ATV Traffic - No Improvements Needed	52	17	29	SESE
Road Route Connections	Existing Roadways Open to ATV Traffic - No Improvements Needed	52	17	29	SWNW
Road Route Connections	Existing Roadways Open to ATV Traffic - No Improvements Needed	52	17	29	Gov. Lot 4
Road Route Connections	Existing Roadways Open to ATV Traffic - No Improvements Needed	52	17	29	Gov. Lot 5
Road Route Connections	Existing Roadways Open to ATV Traffic - No Improvements Needed	52	17	29	Gov. Lot 6
Road Route Connections	Existing Roadways Open to ATV Traffic - No Improvements Needed	52	17	30	NENE
Road Route Connections	Existing Roadways Open to ATV Traffic - No Improvements Needed	52	17	30	NENW
Road Route Connections	Existing Roadways Open to ATV Traffic - No Improvements Needed	52	17	30	NWNE
Road Route Connections	Existing Roadways Open to ATV Traffic - No Improvements Needed	52	17	30	SENE
Road Route Connections	Existing Roadways Open to ATV Traffic - No Improvements Needed	52	17	30	Gov. Lot 1
Road Route Connections	Existing Roadways Open to ATV Traffic - No Improvements Needed	52	17	33	NWNW
Road Route Connections	Existing Roadways Open to ATV Traffic - No Improvements Needed	52	17	33	NWSW
Road Route Connections	Existing Roadways Open to ATV Traffic - No Improvements Needed	52	17	33	SWNW
Road Route Connections	Existing Roadways Open to ATV Traffic - No Improvements Needed	52	17	33	SWSW
Road Route Connections	Existing Roadways Open to ATV Traffic - No Improvements Needed	52	18	12	SESE
Road Route Connections	Existing Roadways Open to ATV Traffic - No Improvements Needed	52	18	12	SESW
Road Route Connections	Existing Roadways Open to ATV Traffic - No Improvements Needed	52	18	12	SWSE
Road Route Connections	Existing Roadways Open to ATV Traffic - No Improvements Needed	52	18	12	SWSW
Road Route Connections	Existing Roadways Open to ATV Traffic - No Improvements Needed	52	18	13	NENE
Road Route Connections	Existing Roadways Open to ATV Traffic - No Improvements Needed	52	18	13	NESE
Road Route Connections	Existing Roadways Open to ATV Traffic - No Improvements Needed	52	18	13	NWNW
Road Route Connections	Existing Roadways Open to ATV Traffic - No Improvements Needed	52	18	13	NWSW
Road Route Connections	Existing Roadways Open to ATV Traffic - No Improvements Needed	52	18	13	SENE
Road Route Connections	Existing Roadways Open to ATV Traffic - No Improvements Needed	52	18	13	SESE
Road Route Connections	Existing Roadways Open to ATV Traffic - No Improvements Needed	52	18	13	SWNW
Road Route Connections	Existing Roadways Open to ATV Traffic - No Improvements Needed	52	18	13	SWSW

Attachment A2: Public Land Survey 1/4, 1/4 Section, Township, Range

Trail Group	Trail Route Category	Township	Range	Section	QQ ID
Road Route Connections	Existing Roadways Open to ATV Traffic - No Improvements Needed	52	18	14	NENE
Road Route Connections	Existing Roadways Open to ATV Traffic - No Improvements Needed	52	18	14	SENE
Road Route Connections	Existing Roadways Open to ATV Traffic - No Improvements Needed	52	18	14	SESE
Road Route Connections	Existing Roadways Open to ATV Traffic - No Improvements Needed	52	18	23	NENE
Road Route Connections	Existing Roadways Open to ATV Traffic - No Improvements Needed	52	18	23	NESE
Road Route Connections	Existing Roadways Open to ATV Traffic - No Improvements Needed	52	18	23	NWSE
Road Route Connections	Existing Roadways Open to ATV Traffic - No Improvements Needed	52	18	23	SENE
Road Route Connections	Existing Roadways Open to ATV Traffic - No Improvements Needed	52	18	23	SWSE
Road Route Connections	Existing Roadways Open to ATV Traffic - No Improvements Needed	52	18	24	NENE
Road Route Connections	Existing Roadways Open to ATV Traffic - No Improvements Needed	52	18	24	NESE
Road Route Connections	Existing Roadways Open to ATV Traffic - No Improvements Needed	52	18	24	NESW
Road Route Connections	Existing Roadways Open to ATV Traffic - No Improvements Needed	52	18	24	NWSW
Road Route Connections	Existing Roadways Open to ATV Traffic - No Improvements Needed	52	18	24	SENE
Road Route Connections	Existing Roadways Open to ATV Traffic - No Improvements Needed	52	18	24	SESE
Road Route Connections	Existing Roadways Open to ATV Traffic - No Improvements Needed	52	18	24	SESW
Road Route Connections	Existing Roadways Open to ATV Traffic - No Improvements Needed	52	18	24	SWNW
Road Route Connections	Existing Roadways Open to ATV Traffic - No Improvements Needed	52	18	24	SWSE
Road Route Connections	Existing Roadways Open to ATV Traffic - No Improvements Needed	52	18	26	NESW
Road Route Connections	Existing Roadways Open to ATV Traffic - No Improvements Needed	52	18	26	NWNE
Road Route Connections	Existing Roadways Open to ATV Traffic - No Improvements Needed	52	18	26	SENW
Road Route Connections	Existing Roadways Open to ATV Traffic - No Improvements Needed	52	18	26	SESW
Road Route Connections	Existing Roadways Open to ATV Traffic - No Improvements Needed	52	18	26	SWNE
Road Route Connections	Existing Roadways Open to ATV Traffic - No Improvements Needed	52	18	35	NENW
Road Route Connections	Existing Roadways Open to ATV Traffic - No Improvements Needed	52	18	35	NESW
Road Route Connections	Existing Roadways Open to ATV Traffic - No Improvements Needed	52	18	35	SENW
Road Route Connections	Existing Roadways Open to ATV Traffic - No Improvements Needed	52	18	35	SESW
Road Route Connections	Existing Roadways Open to ATV Traffic - No Improvements Needed	53	15	1	NENE
Road Route Connections	Existing Roadways Open to ATV Traffic - No Improvements Needed	53	15	1	NENW
Road Route Connections	Existing Roadways Open to ATV Traffic - No Improvements Needed	53	15	1	NWNE
Road Route Connections	Existing Roadways Open to ATV Traffic - No Improvements Needed	53	15	1	NWNW
Road Route Connections	Existing Roadways Open to ATV Traffic - No Improvements Needed	53	15	2	NENE
Road Route Connections	Existing Roadways Open to ATV Traffic - No Improvements Needed	53	15	2	NENW
Road Route Connections	Existing Roadways Open to ATV Traffic - No Improvements Needed	53	15	2	NWNE
Road Route Connections	Existing Roadways Open to ATV Traffic - No Improvements Needed	53	15	2	NWNW
Road Route Connections	Existing Roadways Open to ATV Traffic - No Improvements Needed	53	15	3	NENE
Road Route Connections	Existing Roadways Open to ATV Traffic - No Improvements Needed	53	15	3	NENW
Road Route Connections	Existing Roadways Open to ATV Traffic - No Improvements Needed	53	15	3	NWNE
Road Route Connections	Existing Roadways Open to ATV Traffic - No Improvements Needed	53	15	3	NWNW
Road Route Connections	Existing Roadways Open to ATV Traffic - No Improvements Needed	53	15	4	NENE
Road Route Connections	Existing Roadways Open to ATV Traffic - No Improvements Needed	53	15	4	NENW
Road Route Connections	Existing Roadways Open to ATV Traffic - No Improvements Needed	53	15	4	NWNE
Road Route Connections	Existing Roadways Open to ATV Traffic - No Improvements Needed	53	15	4	NWNW
Road Route Connections	Existing Roadways Open to ATV Traffic - No Improvements Needed	53	15	5	NENE
Road Route Connections	Existing Roadways Open to ATV Traffic - No Improvements Needed	53	15	5	SENE
Road Route Connections	Existing Roadways Open to ATV Traffic - No Improvements Needed	53	15	5	SENW
Road Route Connections	Existing Roadways Open to ATV Traffic - No Improvements Needed	53	15	5	SWNE
Road Route Connections	Existing Roadways Open to ATV Traffic - No Improvements Needed	53	15	5	SWNW
Road Route Connections	Existing Roadways Open to ATV Traffic - No Improvements Needed	53	15	6	SENE
Road Route Connections	Existing Roadways Open to ATV Traffic - No Improvements Needed	53	15	6	SENW
Road Route Connections	Existing Roadways Open to ATV Traffic - No Improvements Needed	53	15	6	SWNE
Road Route Connections	Existing Roadways Open to ATV Traffic - No Improvements Needed	53	15	6	SWNW
Road Route Connections	Existing Roadways Open to ATV Traffic - No Improvements Needed	53	16	1	NESW

Attachment A2: Public Land Survey 1/4, 1/4 Section, Township, Range

Trail Group	Trail Route Category	Township	Range	Section	QQ ID
Road Route Connections	Existing Roadways Open to ATV Traffic - No Improvements Needed	53	16	1	NWSE
Road Route Connections	Existing Roadways Open to ATV Traffic - No Improvements Needed	53	16	1	NWSW
Road Route Connections	Existing Roadways Open to ATV Traffic - No Improvements Needed	53	16	1	SENE
Road Route Connections	Existing Roadways Open to ATV Traffic - No Improvements Needed	53	16	1	SWNE
Road Route Connections	Existing Roadways Open to ATV Traffic - No Improvements Needed	53	16	2	NESE
Road Route Connections	Existing Roadways Open to ATV Traffic - No Improvements Needed	53	16	2	NESW
Road Route Connections	Existing Roadways Open to ATV Traffic - No Improvements Needed	53	16	2	NWSE
Road Route Connections	Existing Roadways Open to ATV Traffic - No Improvements Needed	53	16	2	NWSW
Road Route Connections	Existing Roadways Open to ATV Traffic - No Improvements Needed	53	16	2	SWNW
Road Route Connections	Existing Roadways Open to ATV Traffic - No Improvements Needed	53	16	3	SENE
Road Route Connections	Existing Roadways Open to ATV Traffic - No Improvements Needed	53	16	3	SENW
Road Route Connections	Existing Roadways Open to ATV Traffic - No Improvements Needed	53	16	3	SWNE
Road Route Connections	Existing Roadways Open to ATV Traffic - No Improvements Needed	53	16	3	Gov. Lot 1
Road Route Connections	Existing Roadways Open to ATV Traffic - No Improvements Needed	53	16	3	Gov. Lot 2
Road Route Connections	Existing Roadways Open to ATV Traffic - No Improvements Needed	53	16	30	Gov. Lot 4
Road Route Connections	Existing Roadways Open to ATV Traffic - No Improvements Needed	53	16	31	NENE
Road Route Connections	Existing Roadways Open to ATV Traffic - No Improvements Needed	53	16	31	NENW
Road Route Connections	Existing Roadways Open to ATV Traffic - No Improvements Needed	53	16	31	NWNE
Road Route Connections	Existing Roadways Open to ATV Traffic - No Improvements Needed	53	16	31	Gov. Lot 1
Road Route Connections	Existing Roadways Open to ATV Traffic - No Improvements Needed	53	16	32	NENW
Road Route Connections	Existing Roadways Open to ATV Traffic - No Improvements Needed	53	16	32	NWNW
Road Route Connections	Existing Roadways Open to ATV Traffic - No Improvements Needed	53	17	25	SESE
Road Route Connections	Existing Roadways Open to ATV Traffic - No Improvements Needed	53	17	25	SESW
Road Route Connections	Existing Roadways Open to ATV Traffic - No Improvements Needed	53	17	25	SWSE
Road Route Connections	Existing Roadways Open to ATV Traffic - No Improvements Needed	53	17	25	SWSW
Road Route Connections	Existing Roadways Open to ATV Traffic - No Improvements Needed	53	17	26	SESE
Road Route Connections	Existing Roadways Open to ATV Traffic - No Improvements Needed	53	17	26	SESW
Road Route Connections	Existing Roadways Open to ATV Traffic - No Improvements Needed	53	17	26	SWSE
Road Route Connections	Existing Roadways Open to ATV Traffic - No Improvements Needed	53	17	26	SWSW
Road Route Connections	Existing Roadways Open to ATV Traffic - No Improvements Needed	53	17	34	NENE
Road Route Connections	Existing Roadways Open to ATV Traffic - No Improvements Needed	53	17	34	SESW
Road Route Connections	Existing Roadways Open to ATV Traffic - No Improvements Needed	53	17	34	SWSE
Road Route Connections	Existing Roadways Open to ATV Traffic - No Improvements Needed	53	17	34	SWSW
Road Route Connections	Existing Roadways Open to ATV Traffic - No Improvements Needed	53	17	35	NWNW
Road Route Connections	Existing Roadways Open to ATV Traffic - No Improvements Needed	54	14	31	SESE
Road Route Connections	Existing Roadways Open to ATV Traffic - No Improvements Needed	54	14	31	SESW
Road Route Connections	Existing Roadways Open to ATV Traffic - No Improvements Needed	54	14	31	SWSE
Road Route Connections	Existing Roadways Open to ATV Traffic - No Improvements Needed	54	14	31	Gov. Lot 4
Road Route Connections	Existing Roadways Open to ATV Traffic - No Improvements Needed	54	14	32	SESE
Road Route Connections	Existing Roadways Open to ATV Traffic - No Improvements Needed	54	14	32	SESW
Road Route Connections	Existing Roadways Open to ATV Traffic - No Improvements Needed	54	14	32	SWSE
Road Route Connections	Existing Roadways Open to ATV Traffic - No Improvements Needed	54	14	32	SWSW
Road Route Connections	Existing Roadways Open to ATV Traffic - No Improvements Needed	54	14	33	SESE
Road Route Connections	Existing Roadways Open to ATV Traffic - No Improvements Needed	54	14	33	SESW
Road Route Connections	Existing Roadways Open to ATV Traffic - No Improvements Needed	54	14	33	SWSE
Road Route Connections	Existing Roadways Open to ATV Traffic - No Improvements Needed	54	14	33	SWSW
Road Route Connections	Existing Roadways Open to ATV Traffic - No Improvements Needed	54	15	4	Gov. Lot 2
Road Route Connections	Existing Roadways Open to ATV Traffic - No Improvements Needed	54	15	4	Gov. Lot 3
Road Route Connections	Existing Roadways Open to ATV Traffic - No Improvements Needed	54	15	4	Gov. Lot 4
Road Route Connections	Existing Roadways Open to ATV Traffic - No Improvements Needed	54	15	5	NESW
Road Route Connections	Existing Roadways Open to ATV Traffic - No Improvements Needed	54	15	5	NWSE
Road Route Connections	Existing Roadways Open to ATV Traffic - No Improvements Needed	54	15	5	SENW

Attachment A2: Public Land Survey 1/4, 1/4 Section, Township, Range

Trail Group	Trail Route Category	Township	Range	Section	QQ ID
Road Route Connections	Existing Roadways Open to ATV Traffic - No Improvements Needed	54	15	5	SESW
Road Route Connections	Existing Roadways Open to ATV Traffic - No Improvements Needed	54	15	5	SWNE
Road Route Connections	Existing Roadways Open to ATV Traffic - No Improvements Needed	54	15	5	Gov. Lot 1
Road Route Connections	Existing Roadways Open to ATV Traffic - No Improvements Needed	54	15	5	Gov. Lot 2
Road Route Connections	Existing Roadways Open to ATV Traffic - No Improvements Needed	54	15	6	SESE
Road Route Connections	Existing Roadways Open to ATV Traffic - No Improvements Needed	54	15	6	SESW
Road Route Connections	Existing Roadways Open to ATV Traffic - No Improvements Needed	54	15	6	SWSE
Road Route Connections	Existing Roadways Open to ATV Traffic - No Improvements Needed	54	15	6	Gov. Lot 7
Road Route Connections	Existing Roadways Open to ATV Traffic - No Improvements Needed	54	15	7	NENE
Road Route Connections	Existing Roadways Open to ATV Traffic - No Improvements Needed	54	15	8	NENW
Road Route Connections	Existing Roadways Open to ATV Traffic - No Improvements Needed	54	15	8	NWNW
Road Route Connections	Existing Roadways Open to ATV Traffic - No Improvements Needed	54	15	33	SESW
Road Route Connections	Existing Roadways Open to ATV Traffic - No Improvements Needed	54	15	33	SWSW
Road Route Connections	Existing Roadways Open to ATV Traffic - No Improvements Needed	54	16	1	SESE
Road Route Connections	Existing Roadways Open to ATV Traffic - No Improvements Needed	54	16	1	SESW
Road Route Connections	Existing Roadways Open to ATV Traffic - No Improvements Needed	54	16	1	SWSE
Road Route Connections	Existing Roadways Open to ATV Traffic - No Improvements Needed	54	16	1	SWSW
Road Route Connections	Existing Roadways Open to ATV Traffic - No Improvements Needed	54	16	2	SESE
Road Route Connections	Existing Roadways Open to ATV Traffic - No Improvements Needed	54	16	2	SESW
Road Route Connections	Existing Roadways Open to ATV Traffic - No Improvements Needed	54	16	2	SWSE
Road Route Connections	Existing Roadways Open to ATV Traffic - No Improvements Needed	54	16	2	Gov. Lot 10
Road Route Connections	Existing Roadways Open to ATV Traffic - No Improvements Needed	54	16	3	NESW
Road Route Connections	Existing Roadways Open to ATV Traffic - No Improvements Needed	54	16	3	NWSE
Road Route Connections	Existing Roadways Open to ATV Traffic - No Improvements Needed	54	16	3	SWSW
Road Route Connections	Existing Roadways Open to ATV Traffic - No Improvements Needed	54	16	3	Gov. Lot 5
Road Route Connections	Existing Roadways Open to ATV Traffic - No Improvements Needed	54	16	3	Gov. Lot 7
Road Route Connections	Existing Roadways Open to ATV Traffic - No Improvements Needed	54	16	3	Gov. Lot 8
Road Route Connections	Existing Roadways Open to ATV Traffic - No Improvements Needed	54	16	3	Gov. Lot 9
Road Route Connections	Existing Roadways Open to ATV Traffic - No Improvements Needed	54	16	3	Gov. Lot 99
Road Route Connections	Existing Roadways Open to ATV Traffic - No Improvements Needed	54	16	4	SESE
Road Route Connections	Existing Roadways Open to ATV Traffic - No Improvements Needed	54	16	4	SWSE
Road Route Connections	Existing Roadways Open to ATV Traffic - No Improvements Needed	54	16	6	NWSE
Road Route Connections	Existing Roadways Open to ATV Traffic - No Improvements Needed	54	16	6	SWNE
Road Route Connections	Existing Roadways Open to ATV Traffic - No Improvements Needed	54	16	6	SWSE
Road Route Connections	Existing Roadways Open to ATV Traffic - No Improvements Needed	54	16	6	Gov. Lot 2
Road Route Connections	Existing Roadways Open to ATV Traffic - No Improvements Needed	54	16	7	NESE
Road Route Connections	Existing Roadways Open to ATV Traffic - No Improvements Needed	54	16	7	NWNE
Road Route Connections	Existing Roadways Open to ATV Traffic - No Improvements Needed	54	16	7	NWSE
Road Route Connections	Existing Roadways Open to ATV Traffic - No Improvements Needed	54	16	7	SWNE
Road Route Connections	Existing Roadways Open to ATV Traffic - No Improvements Needed	54	16	7	Gov. Lot 4
Road Route Connections	Existing Roadways Open to ATV Traffic - No Improvements Needed	54	16	7	Gov. Lot 6
Road Route Connections	Existing Roadways Open to ATV Traffic - No Improvements Needed	54	16	7	Gov. Lot 7
Road Route Connections	Existing Roadways Open to ATV Traffic - No Improvements Needed	54	16	8	NESW
Road Route Connections	Existing Roadways Open to ATV Traffic - No Improvements Needed	54	16	8	NWSE
Road Route Connections	Existing Roadways Open to ATV Traffic - No Improvements Needed	54	16	8	NWSW
Road Route Connections	Existing Roadways Open to ATV Traffic - No Improvements Needed	54	16	8	Gov. Lot 1
Road Route Connections	Existing Roadways Open to ATV Traffic - No Improvements Needed	54	16	9	NENW
Road Route Connections	Existing Roadways Open to ATV Traffic - No Improvements Needed	54	16	9	SWNW
Road Route Connections	Existing Roadways Open to ATV Traffic - No Improvements Needed	54	16	9	Gov. Lot 2
Road Route Connections	Existing Roadways Open to ATV Traffic - No Improvements Needed	54	16	9	Gov. Lot 4
Road Route Connections	Existing Roadways Open to ATV Traffic - No Improvements Needed	54	16	9	Gov. Lot 6
Road Route Connections	Existing Roadways Open to ATV Traffic - No Improvements Needed	54	16	11	NWNW

Attachment A2: Public Land Survey 1/4, 1/4 Section, Township, Range

Trail Group	Trail Route Category	Township	Range	Section	QQ ID
Road Route Connections	Existing Roadways Open to ATV Traffic - No Improvements Needed	54	16	11	NWSW
Road Route Connections	Existing Roadways Open to ATV Traffic - No Improvements Needed	54	16	11	SWNW
Road Route Connections	Existing Roadways Open to ATV Traffic - No Improvements Needed	54	16	11	SWSW
Road Route Connections	Existing Roadways Open to ATV Traffic - No Improvements Needed	54	16	14	NWNW
Road Route Connections	Existing Roadways Open to ATV Traffic - No Improvements Needed	54	16	14	NWSW
Road Route Connections	Existing Roadways Open to ATV Traffic - No Improvements Needed	54	16	14	SWNW
Road Route Connections	Existing Roadways Open to ATV Traffic - No Improvements Needed	54	16	14	SWSW
Road Route Connections	Existing Roadways Open to ATV Traffic - No Improvements Needed	54	16	23	NWNW
Road Route Connections	Existing Roadways Open to ATV Traffic - No Improvements Needed	54	16	23	NWSW
Road Route Connections	Existing Roadways Open to ATV Traffic - No Improvements Needed	54	16	23	SWNW
Road Route Connections	Existing Roadways Open to ATV Traffic - No Improvements Needed	54	16	23	SWSW
Road Route Connections	Existing Roadways Open to ATV Traffic - No Improvements Needed	54	16	26	NWNW
Road Route Connections	Existing Roadways Open to ATV Traffic - No Improvements Needed	54	16	26	NWSW
Road Route Connections	Existing Roadways Open to ATV Traffic - No Improvements Needed	54	16	26	SWNW
Road Route Connections	Existing Roadways Open to ATV Traffic - No Improvements Needed	54	16	26	SWSW
Road Route Connections	Existing Roadways Open to ATV Traffic - No Improvements Needed	54	16	34	NENE
Road Route Connections	Existing Roadways Open to ATV Traffic - No Improvements Needed	54	16	34	NESE
Road Route Connections	Existing Roadways Open to ATV Traffic - No Improvements Needed	54	16	34	NWSE
Road Route Connections	Existing Roadways Open to ATV Traffic - No Improvements Needed	54	16	34	SENE
Road Route Connections	Existing Roadways Open to ATV Traffic - No Improvements Needed	54	16	34	SESE
Road Route Connections	Existing Roadways Open to ATV Traffic - No Improvements Needed	54	16	34	SWSE
Road Route Connections	Existing Roadways Open to ATV Traffic - No Improvements Needed	54	16	35	NWNW
Road Route Connections	Existing Roadways Open to ATV Traffic - No Improvements Needed	54	16	35	SWSW
Road Route Connections	Existing Roadways Open to ATV Traffic - No Improvements Needed	54	17	10	SESE
Road Route Connections	Existing Roadways Open to ATV Traffic - No Improvements Needed	54	17	12	SESW
Road Route Connections	Existing Roadways Open to ATV Traffic - No Improvements Needed	54	17	12	SWSE
Road Route Connections	Existing Roadways Open to ATV Traffic - No Improvements Needed	54	17	12	Gov. Lot 1
Road Route Connections	Existing Roadways Open to ATV Traffic - No Improvements Needed	54	17	13	Gov. Lot 4
Road Route Connections	Existing Roadways Open to ATV Traffic - No Improvements Needed	54	17	13	Gov. Lot 5
Road Route Connections	Existing Roadways Open to ATV Traffic - No Improvements Needed	54	17	14	NENE
Road Route Connections	Existing Roadways Open to ATV Traffic - No Improvements Needed	54	17	14	NWNE
Road Route Connections	Existing Roadways Open to ATV Traffic - No Improvements Needed	54	17	14	Gov. Lot 3
Road Route Connections	Existing Roadways Open to ATV Traffic - No Improvements Needed	54	17	14	Gov. Lot 4
Road Route Connections	Existing Roadways Open to ATV Traffic - No Improvements Needed	54	17	14	Gov. Lot 99
Road Route Connections	Existing Roadways Open to ATV Traffic - No Improvements Needed	54	17	15	NENE
Road Route Connections	Existing Roadways Open to ATV Traffic - No Improvements Needed	55	14	3	NWSE
Road Route Connections	Existing Roadways Open to ATV Traffic - No Improvements Needed	55	14	3	SENE
Road Route Connections	Existing Roadways Open to ATV Traffic - No Improvements Needed	55	14	3	SWNE
Road Route Connections	Existing Roadways Open to ATV Traffic - No Improvements Needed	55	14	3	SWSE
Road Route Connections	Existing Roadways Open to ATV Traffic - No Improvements Needed	55	14	3	Gov. Lot 1
Road Route Connections	Existing Roadways Open to ATV Traffic - No Improvements Needed	55	14	6	SESW
Road Route Connections	Existing Roadways Open to ATV Traffic - No Improvements Needed	55	14	6	Gov. Lot 7
Road Route Connections	Existing Roadways Open to ATV Traffic - No Improvements Needed	55	14	7	NENE
Road Route Connections	Existing Roadways Open to ATV Traffic - No Improvements Needed	55	14	7	NENW
Road Route Connections	Existing Roadways Open to ATV Traffic - No Improvements Needed	55	14	7	NESE
Road Route Connections	Existing Roadways Open to ATV Traffic - No Improvements Needed	55	14	7	NESW
Road Route Connections	Existing Roadways Open to ATV Traffic - No Improvements Needed	55	14	7	NWNE
Road Route Connections	Existing Roadways Open to ATV Traffic - No Improvements Needed	55	14	7	SENE
Road Route Connections	Existing Roadways Open to ATV Traffic - No Improvements Needed	55	14	7	SENW
Road Route Connections	Existing Roadways Open to ATV Traffic - No Improvements Needed	55	14	7	SWNE
Road Route Connections	Existing Roadways Open to ATV Traffic - No Improvements Needed	55	14	7	Gov. Lot 1
Road Route Connections	Existing Roadways Open to ATV Traffic - No Improvements Needed	55	14	7	Gov. Lot 3

Attachment A2: Public Land Survey 1/4, 1/4 Section, Township, Range

Trail Group	Trail Route Category	Township	Range	Section	QQ ID
Road Route Connections	Existing Roadways Open to ATV Traffic - No Improvements Needed	55	14	7	Gov. Lot 4
Road Route Connections	Existing Roadways Open to ATV Traffic - No Improvements Needed	55	14	8	NESW
Road Route Connections	Existing Roadways Open to ATV Traffic - No Improvements Needed	55	14	8	NWSE
Road Route Connections	Existing Roadways Open to ATV Traffic - No Improvements Needed	55	14	8	NWSW
Road Route Connections	Existing Roadways Open to ATV Traffic - No Improvements Needed	55	14	8	SESE
Road Route Connections	Existing Roadways Open to ATV Traffic - No Improvements Needed	55	14	8	SWNW
Road Route Connections	Existing Roadways Open to ATV Traffic - No Improvements Needed	55	14	8	SWSE
Road Route Connections	Existing Roadways Open to ATV Traffic - No Improvements Needed	55	14	10	NWNE
Road Route Connections	Existing Roadways Open to ATV Traffic - No Improvements Needed	55	14	10	NWSE
Road Route Connections	Existing Roadways Open to ATV Traffic - No Improvements Needed	55	14	10	SESW
Road Route Connections	Existing Roadways Open to ATV Traffic - No Improvements Needed	55	14	10	SWNE
Road Route Connections	Existing Roadways Open to ATV Traffic - No Improvements Needed	55	14	10	SWSE
Road Route Connections	Existing Roadways Open to ATV Traffic - No Improvements Needed	55	14	15	NENW
Road Route Connections	Existing Roadways Open to ATV Traffic - No Improvements Needed	55	14	15	NWSW
Road Route Connections	Existing Roadways Open to ATV Traffic - No Improvements Needed	55	14	15	SENW
Road Route Connections	Existing Roadways Open to ATV Traffic - No Improvements Needed	55	14	15	SWNW
Road Route Connections	Existing Roadways Open to ATV Traffic - No Improvements Needed	55	14	16	NENW
Road Route Connections	Existing Roadways Open to ATV Traffic - No Improvements Needed	55	14	16	NESE
Road Route Connections	Existing Roadways Open to ATV Traffic - No Improvements Needed	55	14	16	NWNW
Road Route Connections	Existing Roadways Open to ATV Traffic - No Improvements Needed	55	14	16	NWSE
Road Route Connections	Existing Roadways Open to ATV Traffic - No Improvements Needed	55	14	16	SENW
Road Route Connections	Existing Roadways Open to ATV Traffic - No Improvements Needed	55	14	16	SWNE
Road Route Connections	Existing Roadways Open to ATV Traffic - No Improvements Needed	55	14	17	NENE
Road Route Connections	Existing Roadways Open to ATV Traffic - No Improvements Needed	55	14	18	Gov. Lot 1
Road Route Connections	Existing Roadways Open to ATV Traffic - No Improvements Needed	55	15	1	SESW
Road Route Connections	Existing Roadways Open to ATV Traffic - No Improvements Needed	55	15	1	SWSW
Road Route Connections	Existing Roadways Open to ATV Traffic - No Improvements Needed	55	15	2	SESW
Road Route Connections	Existing Roadways Open to ATV Traffic - No Improvements Needed	55	15	2	SWSW
Road Route Connections	Existing Roadways Open to ATV Traffic - No Improvements Needed	55	15	3	NESE
Road Route Connections	Existing Roadways Open to ATV Traffic - No Improvements Needed	55	15	3	SENE
Road Route Connections	Existing Roadways Open to ATV Traffic - No Improvements Needed	55	15	3	SESE
Road Route Connections	Existing Roadways Open to ATV Traffic - No Improvements Needed	55	15	3	Gov. Lot 1
Road Route Connections	Existing Roadways Open to ATV Traffic - No Improvements Needed	55	15	11	Gov. Lot 1
Road Route Connections	Existing Roadways Open to ATV Traffic - No Improvements Needed	55	15	11	Gov. Lot 9
Road Route Connections	Existing Roadways Open to ATV Traffic - No Improvements Needed	55	15	11	Gov. Lot 10
Road Route Connections	Existing Roadways Open to ATV Traffic - No Improvements Needed	55	15	12	NENE
Road Route Connections	Existing Roadways Open to ATV Traffic - No Improvements Needed	55	15	12	NENW
Road Route Connections	Existing Roadways Open to ATV Traffic - No Improvements Needed	55	15	12	NWNE
Road Route Connections	Existing Roadways Open to ATV Traffic - No Improvements Needed	55	15	12	NWNW
Road Route Connections	Existing Roadways Open to ATV Traffic - No Improvements Needed	55	15	13	NENE
Road Route Connections	Existing Roadways Open to ATV Traffic - No Improvements Needed	55	15	13	NESE
Road Route Connections	Existing Roadways Open to ATV Traffic - No Improvements Needed	55	15	13	NWSE
Road Route Connections	Existing Roadways Open to ATV Traffic - No Improvements Needed	55	15	13	SENE
Road Route Connections	Existing Roadways Open to ATV Traffic - No Improvements Needed	55	15	13	SWSE
Road Route Connections	Existing Roadways Open to ATV Traffic - No Improvements Needed	55	15	23	NESE
Road Route Connections	Existing Roadways Open to ATV Traffic - No Improvements Needed	55	15	23	SESE
Road Route Connections	Existing Roadways Open to ATV Traffic - No Improvements Needed	55	15	23	SESW
Road Route Connections	Existing Roadways Open to ATV Traffic - No Improvements Needed	55	15	23	SWSE
Road Route Connections	Existing Roadways Open to ATV Traffic - No Improvements Needed	55	15	24	NESW
Road Route Connections	Existing Roadways Open to ATV Traffic - No Improvements Needed	55	15	24	NWNE
Road Route Connections	Existing Roadways Open to ATV Traffic - No Improvements Needed	55	15	24	NWSE
Road Route Connections	Existing Roadways Open to ATV Traffic - No Improvements Needed	55	15	24	NWSW

Attachment A2: Public Land Survey 1/4, 1/4 Section, Township, Range

Trail Group	Trail Route Category	Township	Range	Section	QQ ID
Road Route Connections	Existing Roadways Open to ATV Traffic - No Improvements Needed	55	15	24	SWNE
Road Route Connections	Existing Roadways Open to ATV Traffic - No Improvements Needed	55	15	26	NENW
Road Route Connections	Existing Roadways Open to ATV Traffic - No Improvements Needed	55	15	26	NESW
Road Route Connections	Existing Roadways Open to ATV Traffic - No Improvements Needed	55	15	26	SENW
Road Route Connections	Existing Roadways Open to ATV Traffic - No Improvements Needed	55	15	26	SESW
Road Route Connections	Existing Roadways Open to ATV Traffic - No Improvements Needed	55	15	26	SWSW
Road Route Connections	Existing Roadways Open to ATV Traffic - No Improvements Needed	55	15	33	SESE
Road Route Connections	Existing Roadways Open to ATV Traffic - No Improvements Needed	55	15	33	SESW
Road Route Connections	Existing Roadways Open to ATV Traffic - No Improvements Needed	55	15	33	SWSE
Road Route Connections	Existing Roadways Open to ATV Traffic - No Improvements Needed	55	15	34	NESE
Road Route Connections	Existing Roadways Open to ATV Traffic - No Improvements Needed	55	15	34	SESE
Road Route Connections	Existing Roadways Open to ATV Traffic - No Improvements Needed	55	15	34	SESW
Road Route Connections	Existing Roadways Open to ATV Traffic - No Improvements Needed	55	15	34	SWSE
Road Route Connections	Existing Roadways Open to ATV Traffic - No Improvements Needed	55	15	34	SWSW
Road Route Connections	Existing Roadways Open to ATV Traffic - No Improvements Needed	55	15	35	NWNW
Road Route Connections	Existing Roadways Open to ATV Traffic - No Improvements Needed	55	15	35	NWSW
Road Route Connections	Existing Roadways Open to ATV Traffic - No Improvements Needed	55	15	35	SWNW
Road Route Connections	Existing Roadways Open to ATV Traffic - No Improvements Needed	55	16	18	NWSE
Road Route Connections	Existing Roadways Open to ATV Traffic - No Improvements Needed	55	16	18	SESE
Road Route Connections	Existing Roadways Open to ATV Traffic - No Improvements Needed	55	16	18	SWSE
Road Route Connections	Existing Roadways Open to ATV Traffic - No Improvements Needed	55	16	19	NENE
Road Route Connections	Existing Roadways Open to ATV Traffic - No Improvements Needed	55	16	19	NESE
Road Route Connections	Existing Roadways Open to ATV Traffic - No Improvements Needed	55	16	19	SENE
Road Route Connections	Existing Roadways Open to ATV Traffic - No Improvements Needed	55	16	19	SESE
Road Route Connections	Existing Roadways Open to ATV Traffic - No Improvements Needed	55	16	29	SWSW
Road Route Connections	Existing Roadways Open to ATV Traffic - No Improvements Needed	55	16	29	Gov. Lot 5
Road Route Connections	Existing Roadways Open to ATV Traffic - No Improvements Needed	55	16	30	NENE
Road Route Connections	Existing Roadways Open to ATV Traffic - No Improvements Needed	55	16	30	NESE
Road Route Connections	Existing Roadways Open to ATV Traffic - No Improvements Needed	55	16	30	SESE
Road Route Connections	Existing Roadways Open to ATV Traffic - No Improvements Needed	55	16	30	Gov. Lot 5
Road Route Connections	Existing Roadways Open to ATV Traffic - No Improvements Needed	55	16	31	NENE
Road Route Connections	Existing Roadways Open to ATV Traffic - No Improvements Needed	55	16	31	NESE
Road Route Connections	Existing Roadways Open to ATV Traffic - No Improvements Needed	55	16	31	SENE
Road Route Connections	Existing Roadways Open to ATV Traffic - No Improvements Needed	55	16	31	SESE
Road Route Connections	Existing Roadways Open to ATV Traffic - No Improvements Needed	55	16	31	SWSE
Road Route Connections	Existing Roadways Open to ATV Traffic - No Improvements Needed	56	14	1	NWSW
Road Route Connections	Existing Roadways Open to ATV Traffic - No Improvements Needed	56	14	1	SENW
Road Route Connections	Existing Roadways Open to ATV Traffic - No Improvements Needed	56	14	1	SWNW
Road Route Connections	Existing Roadways Open to ATV Traffic - No Improvements Needed	56	14	1	SWSW
Road Route Connections	Existing Roadways Open to ATV Traffic - No Improvements Needed	56	14	1	Gov. Lot 3
Road Route Connections	Existing Roadways Open to ATV Traffic - No Improvements Needed	56	14	12	NWNW
Road Route Connections	Existing Roadways Open to ATV Traffic - No Improvements Needed	56	14	12	NWSW
Road Route Connections	Existing Roadways Open to ATV Traffic - No Improvements Needed	56	14	12	SWNW
Road Route Connections	Existing Roadways Open to ATV Traffic - No Improvements Needed	56	14	12	SWSW
Road Route Connections	Existing Roadways Open to ATV Traffic - No Improvements Needed	56	14	13	NWNW
Road Route Connections	Existing Roadways Open to ATV Traffic - No Improvements Needed	56	14	13	NWSW
Road Route Connections	Existing Roadways Open to ATV Traffic - No Improvements Needed	56	14	13	SWNW
Road Route Connections	Existing Roadways Open to ATV Traffic - No Improvements Needed	56	14	14	NESE
Road Route Connections	Existing Roadways Open to ATV Traffic - No Improvements Needed	56	14	14	SESE
Road Route Connections	Existing Roadways Open to ATV Traffic - No Improvements Needed	56	14	23	NENE
Road Route Connections	Existing Roadways Open to ATV Traffic - No Improvements Needed	56	14	23	NESE
Road Route Connections	Existing Roadways Open to ATV Traffic - No Improvements Needed	56	14	23	NWSE

Attachment A2: Public Land Survey 1/4, 1/4 Section, Township, Range

Trail Group	Trail Route Category	Township	Range	Section	QQ ID
Road Route Connections	Existing Roadways Open to ATV Traffic - No Improvements Needed	56	14	23	SENE
Road Route Connections	Existing Roadways Open to ATV Traffic - No Improvements Needed	56	14	23	SESW
Road Route Connections	Existing Roadways Open to ATV Traffic - No Improvements Needed	56	14	23	SWSE
Road Route Connections	Existing Roadways Open to ATV Traffic - No Improvements Needed	56	14	26	NENW
Road Route Connections	Existing Roadways Open to ATV Traffic - No Improvements Needed	56	14	26	NWSW
Road Route Connections	Existing Roadways Open to ATV Traffic - No Improvements Needed	56	14	26	SENW
Road Route Connections	Existing Roadways Open to ATV Traffic - No Improvements Needed	56	14	26	SWNW
Road Route Connections	Existing Roadways Open to ATV Traffic - No Improvements Needed	56	14	26	SWSW
Road Route Connections	Existing Roadways Open to ATV Traffic - No Improvements Needed	56	14	27	SESE
Road Route Connections	Existing Roadways Open to ATV Traffic - No Improvements Needed	56	14	34	NENE
Road Route Connections	Existing Roadways Open to ATV Traffic - No Improvements Needed	56	14	34	NESE
Road Route Connections	Existing Roadways Open to ATV Traffic - No Improvements Needed	56	14	34	SENE
Road Route Connections	Existing Roadways Open to ATV Traffic - No Improvements Needed	56	14	34	SESE
Road Route Connections	Existing Roadways Open to ATV Traffic - No Improvements Needed	56	15	19	NESW
Road Route Connections	Existing Roadways Open to ATV Traffic - No Improvements Needed	56	15	19	NWSE
Road Route Connections	Existing Roadways Open to ATV Traffic - No Improvements Needed	56	15	19	SENW
Road Route Connections	Existing Roadways Open to ATV Traffic - No Improvements Needed	56	15	19	SESE
Road Route Connections	Existing Roadways Open to ATV Traffic - No Improvements Needed	56	15	19	SWSE
Road Route Connections	Existing Roadways Open to ATV Traffic - No Improvements Needed	56	15	19	Gov. Lot 2
Road Route Connections	Existing Roadways Open to ATV Traffic - No Improvements Needed	56	15	27	SESW
Road Route Connections	Existing Roadways Open to ATV Traffic - No Improvements Needed	56	15	27	SWSW
Road Route Connections	Existing Roadways Open to ATV Traffic - No Improvements Needed	56	15	28	SESE
Road Route Connections	Existing Roadways Open to ATV Traffic - No Improvements Needed	56	15	28	SESW
Road Route Connections	Existing Roadways Open to ATV Traffic - No Improvements Needed	56	15	28	SWSE
Road Route Connections	Existing Roadways Open to ATV Traffic - No Improvements Needed	56	15	28	SWSW
Road Route Connections	Existing Roadways Open to ATV Traffic - No Improvements Needed	56	15	29	NWNW
Road Route Connections	Existing Roadways Open to ATV Traffic - No Improvements Needed	56	15	29	NWSW
Road Route Connections	Existing Roadways Open to ATV Traffic - No Improvements Needed	56	15	29	SESE
Road Route Connections	Existing Roadways Open to ATV Traffic - No Improvements Needed	56	15	29	SESW
Road Route Connections	Existing Roadways Open to ATV Traffic - No Improvements Needed	56	15	29	SWNW
Road Route Connections	Existing Roadways Open to ATV Traffic - No Improvements Needed	56	15	29	SWSE
Road Route Connections	Existing Roadways Open to ATV Traffic - No Improvements Needed	56	15	29	SWSW
Road Route Connections	Existing Roadways Open to ATV Traffic - No Improvements Needed	56	15	30	NENE
Road Route Connections	Existing Roadways Open to ATV Traffic - No Improvements Needed	56	15	30	NESE
Road Route Connections	Existing Roadways Open to ATV Traffic - No Improvements Needed	56	15	30	SESE
Road Route Connections	Existing Roadways Open to ATV Traffic - No Improvements Needed	56	15	34	NENW
Road Route Connections	Existing Roadways Open to ATV Traffic - No Improvements Needed	56	15	34	NESW
Road Route Connections	Existing Roadways Open to ATV Traffic - No Improvements Needed	56	15	34	SENW
Road Route Connections	Existing Roadways Open to ATV Traffic - No Improvements Needed	56	15	34	SESE
Road Route Connections	Existing Roadways Open to ATV Traffic - No Improvements Needed	56	15	34	SESW
Road Route Connections	Existing Roadways Open to ATV Traffic - No Improvements Needed	56	15	34	SWSE
Road Route Connections	Existing Roadways Open to ATV Traffic - No Improvements Needed	56	16	3	SWSW
Road Route Connections	Existing Roadways Open to ATV Traffic - No Improvements Needed	56	16	4	SESE
Road Route Connections	Existing Roadways Open to ATV Traffic - No Improvements Needed	56	16	4	SESW
Road Route Connections	Existing Roadways Open to ATV Traffic - No Improvements Needed	56	16	4	SWSE
Road Route Connections	Existing Roadways Open to ATV Traffic - No Improvements Needed	56	16	4	SWSW
Road Route Connections	Existing Roadways Open to ATV Traffic - No Improvements Needed	56	16	5	SESE
Road Route Connections	Existing Roadways Open to ATV Traffic - No Improvements Needed	56	16	5	SESW
Road Route Connections	Existing Roadways Open to ATV Traffic - No Improvements Needed	56	16	5	SWSE
Road Route Connections	Existing Roadways Open to ATV Traffic - No Improvements Needed	56	16	5	SWSW
Road Route Connections	Existing Roadways Open to ATV Traffic - No Improvements Needed	56	16	6	SESE
Road Route Connections	Existing Roadways Open to ATV Traffic - No Improvements Needed	56	16	6	SESW

Attachment A2: Public Land Survey 1/4, 1/4 Section, Township, Range

Trail Group	Trail Route Category	Township	Range	Section	QQ ID
Road Route Connections	Existing Roadways Open to ATV Traffic - No Improvements Needed	56	16	6	SWSE
Road Route Connections	Existing Roadways Open to ATV Traffic - No Improvements Needed	56	16	6	Gov. Lot 5
Road Route Connections	Existing Roadways Open to ATV Traffic - No Improvements Needed	56	16	10	NWNW
Road Route Connections	Existing Roadways Open to ATV Traffic - No Improvements Needed	56	16	10	NWSW
Road Route Connections	Existing Roadways Open to ATV Traffic - No Improvements Needed	56	16	10	SWNW
Road Route Connections	Existing Roadways Open to ATV Traffic - No Improvements Needed	56	16	10	SWSW
Road Route Connections	Existing Roadways Open to ATV Traffic - No Improvements Needed	56	16	14	NWSW
Road Route Connections	Existing Roadways Open to ATV Traffic - No Improvements Needed	56	16	14	Gov. Lot 4
Road Route Connections	Existing Roadways Open to ATV Traffic - No Improvements Needed	56	16	15	NESE
Road Route Connections	Existing Roadways Open to ATV Traffic - No Improvements Needed	56	16	15	NWNW
Road Route Connections	Existing Roadways Open to ATV Traffic - No Improvements Needed	56	16	15	SENE
Road Route Connections	Existing Roadways Open to ATV Traffic - No Improvements Needed	56	16	15	SENW
Road Route Connections	Existing Roadways Open to ATV Traffic - No Improvements Needed	56	16	15	SWNE
Road Route Connections	Existing Roadways Open to ATV Traffic - No Improvements Needed	56	16	15	SWNW
Road Route Connections	Existing Roadways Open to ATV Traffic - No Improvements Needed	56	16	16	NENE
Road Route Connections	Existing Roadways Open to ATV Traffic - No Improvements Needed	56	16	16	SENE
Road Route Connections	Existing Roadways Open to ATV Traffic - No Improvements Needed	56	16	23	NWNW
Road Route Connections	Existing Roadways Open to ATV Traffic - No Improvements Needed	56	16	23	NWSW
Road Route Connections	Existing Roadways Open to ATV Traffic - No Improvements Needed	56	16	23	SESE
Road Route Connections	Existing Roadways Open to ATV Traffic - No Improvements Needed	56	16	23	SWNW
Road Route Connections	Existing Roadways Open to ATV Traffic - No Improvements Needed	56	16	23	SWSW
Road Route Connections	Existing Roadways Open to ATV Traffic - No Improvements Needed	56	16	24	Gov. Lot 2
Road Route Connections	Existing Roadways Open to ATV Traffic - No Improvements Needed	56	16	24	Gov. Lot 3
Road Route Connections	Existing Roadways Open to ATV Traffic - No Improvements Needed	56	16	24	Gov. Lot 5
Road Route Connections	Existing Roadways Open to ATV Traffic - No Improvements Needed	56	16	24	Gov. Lot 99
Road Route Connections	Existing Roadways Open to ATV Traffic - No Improvements Needed	56	16	26	NENW
Road Route Connections	Existing Roadways Open to ATV Traffic - No Improvements Needed	56	16	26	NWNW
Road Route Connections	Existing Roadways Open to ATV Traffic - No Improvements Needed	56	16	26	Gov. Lot 1
Road Route Connections	Existing Roadways Open to ATV Traffic - No Improvements Needed	56	16	26	Gov. Lot 2
Road Route Connections	Existing Roadways Open to ATV Traffic - No Improvements Needed	56	17	1	SESE
Road Route Connections	Existing Roadways Open to ATV Traffic - No Improvements Needed	56	17	1	SESW
Road Route Connections	Existing Roadways Open to ATV Traffic - No Improvements Needed	56	17	1	SWSE
Road Route Connections	Existing Roadways Open to ATV Traffic - No Improvements Needed	56	17	2	SESE
Road Route Connections	Existing Roadways Open to ATV Traffic - No Improvements Needed	56	17	2	SESW
Road Route Connections	Existing Roadways Open to ATV Traffic - No Improvements Needed	56	17	2	SWSE
Road Route Connections	Existing Roadways Open to ATV Traffic - No Improvements Needed	56	17	2	SWSW
Road Route Connections	Existing Roadways Open to ATV Traffic - No Improvements Needed	56	17	3	SESE
Road Route Connections	Existing Roadways Open to ATV Traffic - No Improvements Needed	56	17	3	SESW
Road Route Connections	Existing Roadways Open to ATV Traffic - No Improvements Needed	56	17	3	SWSW
Road Route Connections	Existing Roadways Open to ATV Traffic - No Improvements Needed	56	17	10	NENE
Road Route Connections	Existing Roadways Open to ATV Traffic - No Improvements Needed	56	17	10	NENW
Road Route Connections	Existing Roadways Open to ATV Traffic - No Improvements Needed	56	17	10	NWNE
Road Route Connections	Existing Roadways Open to ATV Traffic - No Improvements Needed	56	17	11	NENE
Road Route Connections	Existing Roadways Open to ATV Traffic - No Improvements Needed	56	17	12	NENW
Road Route Connections	Existing Roadways Open to ATV Traffic - No Improvements Needed	56	17	12	NWNW
Road Route Connections	Existing Roadways Open to ATV Traffic - No Improvements Needed	57	14	36	SESW
Road Route Connections	Existing Trails or Roadways - Improvements Needed	49	15	9	SESE
Road Route Connections	Existing Trails or Roadways - Improvements Needed	49	15	10	NESE
Road Route Connections	Existing Trails or Roadways - Improvements Needed	49	15	10	SESE
Road Route Connections	Existing Trails or Roadways - Improvements Needed	49	15	10	SESW
Road Route Connections	Existing Trails or Roadways - Improvements Needed	49	15	10	SWSE
Road Route Connections	Existing Trails or Roadways - Improvements Needed	49	15	10	SWSW

Attachment A2: Public Land Survey 1/4, 1/4 Section, Township, Range

Trail Group	Trail Route Category	Township	Range	Section	QQ ID
Road Route Connections	Existing Trails or Roadways - Improvements Needed	49	15	15	NENE
Road Route Connections	Existing Trails or Roadways - Improvements Needed	49	15	15	NWNE
Road Route Connections	Existing Trails or Roadways - Improvements Needed	49	15	15	SWSW
Road Route Connections	Existing Trails or Roadways - Improvements Needed	49	15	16	NENE
Road Route Connections	Existing Trails or Roadways - Improvements Needed	49	15	16	NESE
Road Route Connections	Existing Trails or Roadways - Improvements Needed	49	15	16	SENE
Road Route Connections	Existing Trails or Roadways - Improvements Needed	49	15	16	SESE
Road Route Connections	Existing Trails or Roadways - Improvements Needed	49	15	16	SESW
Road Route Connections	Existing Trails or Roadways - Improvements Needed	49	15	16	SWSE
Road Route Connections	Existing Trails or Roadways - Improvements Needed	49	15	19	NESE
Road Route Connections	Existing Trails or Roadways - Improvements Needed	49	15	19	SESE
Road Route Connections	Existing Trails or Roadways - Improvements Needed	49	15	19	SESW
Road Route Connections	Existing Trails or Roadways - Improvements Needed	49	15	19	SWSE
Road Route Connections	Existing Trails or Roadways - Improvements Needed	49	15	20	NESE
Road Route Connections	Existing Trails or Roadways - Improvements Needed	49	15	20	NESW
Road Route Connections	Existing Trails or Roadways - Improvements Needed	49	15	20	NWSE
Road Route Connections	Existing Trails or Roadways - Improvements Needed	49	15	20	NWSW
Road Route Connections	Existing Trails or Roadways - Improvements Needed	49	15	21	NENW
Road Route Connections	Existing Trails or Roadways - Improvements Needed	49	15	21	NWNW
Road Route Connections	Existing Trails or Roadways - Improvements Needed	49	15	21	NWSW
Road Route Connections	Existing Trails or Roadways - Improvements Needed	49	15	21	SWNW
Road Route Connections	Existing Trails or Roadways - Improvements Needed	49	15	30	NENW
Road Route Connections	Existing Trails or Roadways - Improvements Needed	49	15	30	NWNW
Road Route Connections	Existing Trails or Roadways - Improvements Needed	49	15	30	SWNW
Road Route Connections	Existing Trails or Roadways - Improvements Needed	49	16	19	Gov. Lot 6
Road Route Connections	Existing Trails or Roadways - Improvements Needed	49	16	20	SESE
Road Route Connections	Existing Trails or Roadways - Improvements Needed	49	16	21	SESE
Road Route Connections	Existing Trails or Roadways - Improvements Needed	49	16	21	SESW
Road Route Connections	Existing Trails or Roadways - Improvements Needed	49	16	21	SWSE
Road Route Connections	Existing Trails or Roadways - Improvements Needed	49	16	21	SWSW
Road Route Connections	Existing Trails or Roadways - Improvements Needed	49	16	22	SESE
Road Route Connections	Existing Trails or Roadways - Improvements Needed	49	16	22	SESW
Road Route Connections	Existing Trails or Roadways - Improvements Needed	49	16	22	SWSE
Road Route Connections	Existing Trails or Roadways - Improvements Needed	49	16	22	SWSW
Road Route Connections	Existing Trails or Roadways - Improvements Needed	49	16	23	SESE
Road Route Connections	Existing Trails or Roadways - Improvements Needed	49	16	23	SESW
Road Route Connections	Existing Trails or Roadways - Improvements Needed	49	16	23	SWSE
Road Route Connections	Existing Trails or Roadways - Improvements Needed	49	16	23	SWSW
Road Route Connections	Existing Trails or Roadways - Improvements Needed	49	16	24	SESW
Road Route Connections	Existing Trails or Roadways - Improvements Needed	49	16	24	SWSW
Road Route Connections	Existing Trails or Roadways - Improvements Needed	49	16	25	NENE
Road Route Connections	Existing Trails or Roadways - Improvements Needed	49	16	25	NENW
Road Route Connections	Existing Trails or Roadways - Improvements Needed	49	16	25	NWNE
Road Route Connections	Existing Trails or Roadways - Improvements Needed	49	16	29	NENE
Road Route Connections	Existing Trails or Roadways - Improvements Needed	49	16	29	NENW
Road Route Connections	Existing Trails or Roadways - Improvements Needed	49	16	29	NWNE
Road Route Connections	Existing Trails or Roadways - Improvements Needed	49	16	29	NWNW
Road Route Connections	Existing Trails or Roadways - Improvements Needed	49	16	30	NENE
Road Route Connections	Existing Trails or Roadways - Improvements Needed	49	16	30	Gov. Lot 1
Road Route Connections	Existing Trails or Roadways - Improvements Needed	49	16	30	Gov. Lot 9
Road Route Connections	Existing Trails or Roadways - Improvements Needed	49	16	30	Gov. Lot 11
Road Route Connections	Existing Trails or Roadways - Improvements Needed	49	16	30	Gov. Lot 99

Attachment A2: Public Land Survey 1/4, 1/4 Section, Township, Range

Trail Group	Trail Route Category	Township	Range	Section	QQ ID
Road Route Connections	Existing Trails or Roadways - Improvements Needed	49	17	14	Gov. Lot 6
Road Route Connections	Existing Trails or Roadways - Improvements Needed	49	17	23	NENW
Road Route Connections	Existing Trails or Roadways - Improvements Needed	49	17	23	NESW
Road Route Connections	Existing Trails or Roadways - Improvements Needed	49	17	23	SENW
Road Route Connections	Existing Trails or Roadways - Improvements Needed	50	17	26	Gov. Lot 11
Road Route Connections	Existing Trails or Roadways - Improvements Needed	50	17	35	NENW
Road Route Connections	Existing Trails or Roadways - Improvements Needed	50	17	35	NWNE
Road Route Connections	Existing Trails or Roadways - Improvements Needed	50	18	1	Gov. Lot 6
Road Route Connections	Existing Trails or Roadways - Improvements Needed	50	18	1	Gov. Lot 99
Road Route Connections	Existing Trails or Roadways - Improvements Needed	50	18	2	Gov. Lot 1
Road Route Connections	Existing Trails or Roadways - Improvements Needed	50	18	2	Gov. Lot 2
Road Route Connections	Existing Trails or Roadways - Improvements Needed	50	18	2	Gov. Lot 3
Road Route Connections	Existing Trails or Roadways - Improvements Needed	50	18	2	Gov. Lot 4
Road Route Connections	Existing Trails or Roadways - Improvements Needed	50	18	2	Gov. Lot 99
Road Route Connections	Existing Trails or Roadways - Improvements Needed	52	17	11	NENE
Road Route Connections	Existing Trails or Roadways - Improvements Needed	52	17	11	NESW
Road Route Connections	Existing Trails or Roadways - Improvements Needed	52	17	11	NWNE
Road Route Connections	Existing Trails or Roadways - Improvements Needed	52	17	11	NWSE
Road Route Connections	Existing Trails or Roadways - Improvements Needed	52	17	11	SENE
Road Route Connections	Existing Trails or Roadways - Improvements Needed	52	17	11	SESW
Road Route Connections	Existing Trails or Roadways - Improvements Needed	52	17	11	SWNE
Road Route Connections	Existing Trails or Roadways - Improvements Needed	52	17	11	SWSW
Road Route Connections	Existing Trails or Roadways - Improvements Needed	53	16	27	SESW
Road Route Connections	Existing Trails or Roadways - Improvements Needed	53	16	27	SWSW
Road Route Connections	Existing Trails or Roadways - Improvements Needed	53	16	28	SESE
Road Route Connections	Existing Trails or Roadways - Improvements Needed	53	16	28	SESW
Road Route Connections	Existing Trails or Roadways - Improvements Needed	53	16	28	SWSE
Road Route Connections	Existing Trails or Roadways - Improvements Needed	53	16	28	SWSW
Road Route Connections	Existing Trails or Roadways - Improvements Needed	53	16	29	SESE
Road Route Connections	Existing Trails or Roadways - Improvements Needed	53	16	29	SWSE
Road Route Connections	Existing Trails or Roadways - Improvements Needed	53	16	32	NENW
Road Route Connections	Existing Trails or Roadways - Improvements Needed	53	16	32	NWNE
Road Route Connections	Existing Trails or Roadways - Improvements Needed	53	16	33	NENE
Road Route Connections	Existing Trails or Roadways - Improvements Needed	53	16	34	NWNW
Road Route Connections	Proposed Route - New Construction Proposed for ATV Use	50	17	14	NENE
Road Route Connections	Proposed Route - New Construction Proposed for ATV Use	50	17	14	NESE
Road Route Connections	Proposed Route - New Construction Proposed for ATV Use	50	17	14	SENE
Road Route Connections	Proposed Route - New Construction Proposed for ATV Use	50	17	14	SESE
Road Route Connections	Proposed Route - New Construction Proposed for ATV Use	50	17	23	NENE
Road Route Connections	Proposed Route - New Construction Proposed for ATV Use	52	17	3	Gov. Lot 1
Road Route Connections	Proposed Route - New Construction Proposed for ATV Use	53	17	34	NENE
Road Route Connections	Proposed Route - New Construction Proposed for ATV Use	53	17	34	NESE
Road Route Connections	Proposed Route - New Construction Proposed for ATV Use	53	17	34	SENE
Road Route Connections	Proposed Route - New Construction Proposed for ATV Use	53	17	34	SESE
Taft to Canyon	Existing Trails or Roadways - Improvements Needed	52	15	19	NESE
Taft to Canyon	Existing Trails or Roadways - Improvements Needed	52	15	19	SESE
Taft to Canyon	Existing Trails or Roadways - Improvements Needed	52	15	19	Gov. Lot 3
Taft to Canyon	Existing Trails or Roadways - Improvements Needed	52	15	19	Gov. Lot 4
Taft to Canyon	Existing Trails or Roadways - Improvements Needed	52	15	19	Gov. Lot 5
Taft to Canyon	Existing Trails or Roadways - Improvements Needed	52	15	20	NESE
Taft to Canyon	Existing Trails or Roadways - Improvements Needed	52	15	20	NESW
Taft to Canyon	Existing Trails or Roadways - Improvements Needed	52	15	20	NWSE

Attachment A2: Public Land Survey 1/4, 1/4 Section, Township, Range

Trail Group	Trail Route Category	Township	Range	Section	QQ ID
Taft to Canyon	Existing Trails or Roadways - Improvements Needed	52	15	20	NWSW
Taft to Canyon	Existing Trails or Roadways - Improvements Needed	52	15	20	SESE
Taft to Canyon	Existing Trails or Roadways - Improvements Needed	52	15	20	SWNE
Taft to Canyon	Existing Trails or Roadways - Improvements Needed	52	15	20	Gov. Lot 4
Taft to Canyon	Existing Trails or Roadways - Improvements Needed	52	15	20	Gov. Lot 5
Taft to Canyon	Existing Trails or Roadways - Improvements Needed	52	15	21	SWSW
Taft to Canyon	Existing Trails or Roadways - Improvements Needed	52	15	28	Gov. Lot 1
Taft to Canyon	Existing Trails or Roadways - Improvements Needed	52	15	29	NENE
Taft to Canyon	Existing Trails or Roadways - Improvements Needed	52	15	29	NWNW
Taft to Canyon	Existing Trails or Roadways - Improvements Needed	52	15	29	SENW
Taft to Canyon	Existing Trails or Roadways - Improvements Needed	52	15	29	SWNW
Taft to Canyon	Existing Trails or Roadways - Improvements Needed	52	15	29	Gov. Lot 1
Taft to Canyon	Existing Trails or Roadways - Improvements Needed	52	15	30	NENE
Taft to Canyon	Existing Trails or Roadways - Improvements Needed	52	15	30	NENW
Taft to Canyon	Existing Trails or Roadways - Improvements Needed	52	15	30	NWNW
Taft to Canyon	Existing Trails or Roadways - Improvements Needed	52	16	3	NESE
Taft to Canyon	Existing Trails or Roadways - Improvements Needed	52	16	3	NWSE
Taft to Canyon	Existing Trails or Roadways - Improvements Needed	52	16	3	SENE
Taft to Canyon	Existing Trails or Roadways - Improvements Needed	52	16	3	SESE
Taft to Canyon	Existing Trails or Roadways - Improvements Needed	52	16	3	SWNE
Taft to Canyon	Existing Trails or Roadways - Improvements Needed	52	16	3	SWSE
Taft to Canyon	Existing Trails or Roadways - Improvements Needed	52	16	3	Gov. Lot 2
Taft to Canyon	Existing Trails or Roadways - Improvements Needed	52	16	5	NESW
Taft to Canyon	Existing Trails or Roadways - Improvements Needed	52	16	5	NWSE
Taft to Canyon	Existing Trails or Roadways - Improvements Needed	52	16	5	NWSW
Taft to Canyon	Existing Trails or Roadways - Improvements Needed	52	16	5	SENE
Taft to Canyon	Existing Trails or Roadways - Improvements Needed	52	16	5	SENW
Taft to Canyon	Existing Trails or Roadways - Improvements Needed	52	16	5	SESW
Taft to Canyon	Existing Trails or Roadways - Improvements Needed	52	16	5	SWNE
Taft to Canyon	Existing Trails or Roadways - Improvements Needed	52	16	5	SWNW
Taft to Canyon	Existing Trails or Roadways - Improvements Needed	52	16	5	SWSW
Taft to Canyon	Existing Trails or Roadways - Improvements Needed	52	16	5	Gov. Lot 1
Taft to Canyon	Existing Trails or Roadways - Improvements Needed	52	16	5	Gov. Lot 2
Taft to Canyon	Existing Trails or Roadways - Improvements Needed	52	16	5	Gov. Lot 3
Taft to Canyon	Existing Trails or Roadways - Improvements Needed	52	16	5	Gov. Lot 4
Taft to Canyon	Existing Trails or Roadways - Improvements Needed	52	16	6	NESW
Taft to Canyon	Existing Trails or Roadways - Improvements Needed	52	16	6	SENW
Taft to Canyon	Existing Trails or Roadways - Improvements Needed	52	16	6	SESE
Taft to Canyon	Existing Trails or Roadways - Improvements Needed	52	16	6	SWNE
Taft to Canyon	Existing Trails or Roadways - Improvements Needed	52	16	6	Gov. Lot 2
Taft to Canyon	Existing Trails or Roadways - Improvements Needed	52	16	6	Gov. Lot 6
Taft to Canyon	Existing Trails or Roadways - Improvements Needed	52	16	6	Gov. Lot 7
Taft to Canyon	Existing Trails or Roadways - Improvements Needed	52	16	7	NENE
Taft to Canyon	Existing Trails or Roadways - Improvements Needed	52	16	7	NESE
Taft to Canyon	Existing Trails or Roadways - Improvements Needed	52	16	7	NESW
Taft to Canyon	Existing Trails or Roadways - Improvements Needed	52	16	7	NWNE
Taft to Canyon	Existing Trails or Roadways - Improvements Needed	52	16	7	SENE
Taft to Canyon	Existing Trails or Roadways - Improvements Needed	52	16	7	SENW
Taft to Canyon	Existing Trails or Roadways - Improvements Needed	52	16	7	SESE
Taft to Canyon	Existing Trails or Roadways - Improvements Needed	52	16	7	SWNE
Taft to Canyon	Existing Trails or Roadways - Improvements Needed	52	16	7	Gov. Lot 1
Taft to Canyon	Existing Trails or Roadways - Improvements Needed	52	16	7	Gov. Lot 2

Attachment A2: Public Land Survey 1/4, 1/4 Section, Township, Range

Trail Group	Trail Route Category	Township	Range	Section	QQ ID
Taft to Canyon	Existing Trails or Roadways - Improvements Needed	52	16	7	Gov. Lot 3
Taft to Canyon	Existing Trails or Roadways - Improvements Needed	52	16	8	NENW
Taft to Canyon	Existing Trails or Roadways - Improvements Needed	52	16	8	NESE
Taft to Canyon	Existing Trails or Roadways - Improvements Needed	52	16	8	NESW
Taft to Canyon	Existing Trails or Roadways - Improvements Needed	52	16	8	NWNE
Taft to Canyon	Existing Trails or Roadways - Improvements Needed	52	16	8	NWSE
Taft to Canyon	Existing Trails or Roadways - Improvements Needed	52	16	8	SENE
Taft to Canyon	Existing Trails or Roadways - Improvements Needed	52	16	8	SENW
Taft to Canyon	Existing Trails or Roadways - Improvements Needed	52	16	8	SWNE
Taft to Canyon	Existing Trails or Roadways - Improvements Needed	52	16	9	NWSW
Taft to Canyon	Existing Trails or Roadways - Improvements Needed	52	16	9	SESE
Taft to Canyon	Existing Trails or Roadways - Improvements Needed	52	16	9	SESW
Taft to Canyon	Existing Trails or Roadways - Improvements Needed	52	16	9	SWSE
Taft to Canyon	Existing Trails or Roadways - Improvements Needed	52	16	9	SWSW
Taft to Canyon	Existing Trails or Roadways - Improvements Needed	52	16	10	NENE
Taft to Canyon	Existing Trails or Roadways - Improvements Needed	52	16	10	NESE
Taft to Canyon	Existing Trails or Roadways - Improvements Needed	52	16	10	NWNE
Taft to Canyon	Existing Trails or Roadways - Improvements Needed	52	16	10	SENE
Taft to Canyon	Existing Trails or Roadways - Improvements Needed	52	16	10	SESE
Taft to Canyon	Existing Trails or Roadways - Improvements Needed	52	16	10	SESW
Taft to Canyon	Existing Trails or Roadways - Improvements Needed	52	16	10	SWNE
Taft to Canyon	Existing Trails or Roadways - Improvements Needed	52	16	10	SWSE
Taft to Canyon	Existing Trails or Roadways - Improvements Needed	52	16	11	NWSW
Taft to Canyon	Existing Trails or Roadways - Improvements Needed	52	16	11	SESW
Taft to Canyon	Existing Trails or Roadways - Improvements Needed	52	16	11	SWSW
Taft to Canyon	Existing Trails or Roadways - Improvements Needed	52	16	14	NENW
Taft to Canyon	Existing Trails or Roadways - Improvements Needed	52	16	14	NESW
Taft to Canyon	Existing Trails or Roadways - Improvements Needed	52	16	14	NWNE
Taft to Canyon	Existing Trails or Roadways - Improvements Needed	52	16	14	NWNW
Taft to Canyon	Existing Trails or Roadways - Improvements Needed	52	16	14	NWSE
Taft to Canyon	Existing Trails or Roadways - Improvements Needed	52	16	14	NWSW
Taft to Canyon	Existing Trails or Roadways - Improvements Needed	52	16	14	SENW
Taft to Canyon	Existing Trails or Roadways - Improvements Needed	52	16	14	SESW
Taft to Canyon	Existing Trails or Roadways - Improvements Needed	52	16	14	SWNE
Taft to Canyon	Existing Trails or Roadways - Improvements Needed	52	16	14	SWNW
Taft to Canyon	Existing Trails or Roadways - Improvements Needed	52	16	14	SWSE
Taft to Canyon	Existing Trails or Roadways - Improvements Needed	52	16	15	NENW
Taft to Canyon	Existing Trails or Roadways - Improvements Needed	52	16	15	NESE
Taft to Canyon	Existing Trails or Roadways - Improvements Needed	52	16	15	NESW
Taft to Canyon	Existing Trails or Roadways - Improvements Needed	52	16	15	NWNW
Taft to Canyon	Existing Trails or Roadways - Improvements Needed	52	16	15	NWSE
Taft to Canyon	Existing Trails or Roadways - Improvements Needed	52	16	15	NWSW
Taft to Canyon	Existing Trails or Roadways - Improvements Needed	52	16	16	NENE
Taft to Canyon	Existing Trails or Roadways - Improvements Needed	52	16	16	NESE
Taft to Canyon	Existing Trails or Roadways - Improvements Needed	52	16	16	NWSW
Taft to Canyon	Existing Trails or Roadways - Improvements Needed	52	16	16	SESE
Taft to Canyon	Existing Trails or Roadways - Improvements Needed	52	16	16	SESW
Taft to Canyon	Existing Trails or Roadways - Improvements Needed	52	16	16	SWSE
Taft to Canyon	Existing Trails or Roadways - Improvements Needed	52	16	16	SWSW
Taft to Canyon	Existing Trails or Roadways - Improvements Needed	52	16	17	NENW
Taft to Canyon	Existing Trails or Roadways - Improvements Needed	52	16	17	NESE
Taft to Canyon	Existing Trails or Roadways - Improvements Needed	52	16	17	NWNE

Attachment A2: Public Land Survey 1/4, 1/4 Section, Township, Range

Trail Group	Trail Route Category	Township	Range	Section	QQ ID
Taft to Canyon	Existing Trails or Roadways - Improvements Needed	52	16	17	NWNW
Taft to Canyon	Existing Trails or Roadways - Improvements Needed	52	16	17	SENE
Taft to Canyon	Existing Trails or Roadways - Improvements Needed	52	16	17	SENW
Taft to Canyon	Existing Trails or Roadways - Improvements Needed	52	16	17	SESE
Taft to Canyon	Existing Trails or Roadways - Improvements Needed	52	16	17	SWNE
Taft to Canyon	Existing Trails or Roadways - Improvements Needed	52	16	17	SWNW
Taft to Canyon	Existing Trails or Roadways - Improvements Needed	52	16	18	NENE
Taft to Canyon	Existing Trails or Roadways - Improvements Needed	52	16	18	NESE
Taft to Canyon	Existing Trails or Roadways - Improvements Needed	52	16	18	NWSE
Taft to Canyon	Existing Trails or Roadways - Improvements Needed	52	16	18	SENE
Taft to Canyon	Existing Trails or Roadways - Improvements Needed	52	16	18	SESW
Taft to Canyon	Existing Trails or Roadways - Improvements Needed	52	16	18	SWSE
Taft to Canyon	Existing Trails or Roadways - Improvements Needed	52	16	19	NENW
Taft to Canyon	Existing Trails or Roadways - Improvements Needed	52	16	19	NESE
Taft to Canyon	Existing Trails or Roadways - Improvements Needed	52	16	19	SESE
Taft to Canyon	Existing Trails or Roadways - Improvements Needed	52	16	19	SESW
Taft to Canyon	Existing Trails or Roadways - Improvements Needed	52	16	19	SWSE
Taft to Canyon	Existing Trails or Roadways - Improvements Needed	52	16	19	Gov. Lot 1
Taft to Canyon	Existing Trails or Roadways - Improvements Needed	52	16	19	Gov. Lot 2
Taft to Canyon	Existing Trails or Roadways - Improvements Needed	52	16	19	Gov. Lot 4
Taft to Canyon	Existing Trails or Roadways - Improvements Needed	52	16	20	NENE
Taft to Canyon	Existing Trails or Roadways - Improvements Needed	52	16	20	NENW
Taft to Canyon	Existing Trails or Roadways - Improvements Needed	52	16	20	NESE
Taft to Canyon	Existing Trails or Roadways - Improvements Needed	52	16	20	NWNE
Taft to Canyon	Existing Trails or Roadways - Improvements Needed	52	16	20	NWSW
Taft to Canyon	Existing Trails or Roadways - Improvements Needed	52	16	20	SENE
Taft to Canyon	Existing Trails or Roadways - Improvements Needed	52	16	20	SENW
Taft to Canyon	Existing Trails or Roadways - Improvements Needed	52	16	20	SESE
Taft to Canyon	Existing Trails or Roadways - Improvements Needed	52	16	20	SWNW
Taft to Canyon	Existing Trails or Roadways - Improvements Needed	52	16	21	NENE
Taft to Canyon	Existing Trails or Roadways - Improvements Needed	52	16	21	NENW
Taft to Canyon	Existing Trails or Roadways - Improvements Needed	52	16	21	NESW
Taft to Canyon	Existing Trails or Roadways - Improvements Needed	52	16	21	NWNE
Taft to Canyon	Existing Trails or Roadways - Improvements Needed	52	16	21	NWNW
Taft to Canyon	Existing Trails or Roadways - Improvements Needed	52	16	21	NWSW
Taft to Canyon	Existing Trails or Roadways - Improvements Needed	52	16	21	SWNE
Taft to Canyon	Existing Trails or Roadways - Improvements Needed	52	16	21	SWNW
Taft to Canyon	Existing Trails or Roadways - Improvements Needed	52	16	21	SWSW
Taft to Canyon	Existing Trails or Roadways - Improvements Needed	52	16	21	Gov. Lot 1
Taft to Canyon	Existing Trails or Roadways - Improvements Needed	52	16	21	Gov. Lot 3
Taft to Canyon	Existing Trails or Roadways - Improvements Needed	52	16	22	Gov. Lot 2
Taft to Canyon	Existing Trails or Roadways - Improvements Needed	52	16	22	Gov. Lot 3
Taft to Canyon	Existing Trails or Roadways - Improvements Needed	52	16	22	Gov. Lot 4
Taft to Canyon	Existing Trails or Roadways - Improvements Needed	52	16	22	Gov. Lot 5
Taft to Canyon	Existing Trails or Roadways - Improvements Needed	52	16	23	NENW
Taft to Canyon	Existing Trails or Roadways - Improvements Needed	52	16	23	NWNE
Taft to Canyon	Existing Trails or Roadways - Improvements Needed	52	16	25	NESW
Taft to Canyon	Existing Trails or Roadways - Improvements Needed	52	16	25	NWSE
Taft to Canyon	Existing Trails or Roadways - Improvements Needed	52	16	25	Gov. Lot 5
Taft to Canyon	Existing Trails or Roadways - Improvements Needed	52	16	25	Gov. Lot 6
Taft to Canyon	Existing Trails or Roadways - Improvements Needed	52	16	25	Gov. Lot 7
Taft to Canyon	Existing Trails or Roadways - Improvements Needed	52	16	25	Gov. Lot 8

Attachment A2: Public Land Survey 1/4, 1/4 Section, Township, Range

Trail Group	Trail Route Category	Township	Range	Section	QQ ID
Taft to Canyon	Existing Trails or Roadways - Improvements Needed	52	16	25	Gov. Lot 9
Taft to Canyon	Existing Trails or Roadways - Improvements Needed	52	16	25	Gov. Lot 10
Taft to Canyon	Existing Trails or Roadways - Improvements Needed	52	16	26	Gov. Lot 5
Taft to Canyon	Existing Trails or Roadways - Improvements Needed	52	16	29	NENE
Taft to Canyon	Existing Trails or Roadways - Improvements Needed	52	16	29	NWNE
Taft to Canyon	Existing Trails or Roadways - Improvements Needed	52	16	29	NWSW
Taft to Canyon	Existing Trails or Roadways - Improvements Needed	52	16	29	SENW
Taft to Canyon	Existing Trails or Roadways - Improvements Needed	52	16	29	SWNE
Taft to Canyon	Existing Trails or Roadways - Improvements Needed	52	16	29	SWNW
Taft to Canyon	Existing Trails or Roadways - Improvements Needed	52	16	29	Gov. Lot 1
Taft to Canyon	Existing Trails or Roadways - Improvements Needed	52	16	29	Gov. Lot 3
Taft to Canyon	Existing Trails or Roadways - Improvements Needed	52	16	29	Gov. Lot 4
Taft to Canyon	Existing Trails or Roadways - Improvements Needed	52	16	29	Gov. Lot 99
Taft to Canyon	Existing Trails or Roadways - Improvements Needed	52	16	30	NENW
Taft to Canyon	Existing Trails or Roadways - Improvements Needed	52	16	30	NESE
Taft to Canyon	Existing Trails or Roadways - Improvements Needed	52	16	30	NESW
Taft to Canyon	Existing Trails or Roadways - Improvements Needed	52	16	30	SESE
Taft to Canyon	Existing Trails or Roadways - Improvements Needed	52	16	30	SESW
Taft to Canyon	Existing Trails or Roadways - Improvements Needed	52	16	30	SWSE
Taft to Canyon	Existing Trails or Roadways - Improvements Needed	52	16	30	Gov. Lot 1
Taft to Canyon	Existing Trails or Roadways - Improvements Needed	52	16	30	Gov. Lot 2
Taft to Canyon	Existing Trails or Roadways - Improvements Needed	52	16	30	Gov. Lot 3
Taft to Canyon	Existing Trails or Roadways - Improvements Needed	52	16	31	Gov. Lot 1
Taft to Canyon	Existing Trails or Roadways - Improvements Needed	52	16	31	Gov. Lot 2
Taft to Canyon	Existing Trails or Roadways - Improvements Needed	52	16	31	Gov. Lot 3
Taft to Canyon	Existing Trails or Roadways - Improvements Needed	52	16	32	Gov. Lot 1
Taft to Canyon	Existing Trails or Roadways - Improvements Needed	52	16	35	NENE
Taft to Canyon	Existing Trails or Roadways - Improvements Needed	52	16	35	NWNW
Taft to Canyon	Existing Trails or Roadways - Improvements Needed	52	16	35	Gov. Lot 1
Taft to Canyon	Existing Trails or Roadways - Improvements Needed	52	16	35	Gov. Lot 2
Taft to Canyon	Existing Trails or Roadways - Improvements Needed	52	16	36	NWNW
Taft to Canyon	Existing Trails or Roadways - Improvements Needed	52	17	1	SESE
Taft to Canyon	Existing Trails or Roadways - Improvements Needed	52	17	11	NESE
Taft to Canyon	Existing Trails or Roadways - Improvements Needed	52	17	11	SENE
Taft to Canyon	Existing Trails or Roadways - Improvements Needed	52	17	11	SESE
Taft to Canyon	Existing Trails or Roadways - Improvements Needed	52	17	12	NENE
Taft to Canyon	Existing Trails or Roadways - Improvements Needed	52	17	12	NENW
Taft to Canyon	Existing Trails or Roadways - Improvements Needed	52	17	12	NESE
Taft to Canyon	Existing Trails or Roadways - Improvements Needed	52	17	12	NWNW
Taft to Canyon	Existing Trails or Roadways - Improvements Needed	52	17	12	NWSW
Taft to Canyon	Existing Trails or Roadways - Improvements Needed	52	17	12	SENE
Taft to Canyon	Existing Trails or Roadways - Improvements Needed	52	17	12	SENW
Taft to Canyon	Existing Trails or Roadways - Improvements Needed	52	17	12	SESW
Taft to Canyon	Existing Trails or Roadways - Improvements Needed	52	17	12	SWNE
Taft to Canyon	Existing Trails or Roadways - Improvements Needed	52	17	12	SWNW
Taft to Canyon	Existing Trails or Roadways - Improvements Needed	52	17	12	SWSW
Taft to Canyon	Existing Trails or Roadways - Improvements Needed	52	17	13	NENW
Taft to Canyon	Existing Trails or Roadways - Improvements Needed	52	17	13	NESW
Taft to Canyon	Existing Trails or Roadways - Improvements Needed	52	17	13	NWNW
Taft to Canyon	Existing Trails or Roadways - Improvements Needed	52	17	13	NWSW
Taft to Canyon	Existing Trails or Roadways - Improvements Needed	52	17	13	SENW
Taft to Canyon	Existing Trails or Roadways - Improvements Needed	52	17	13	SESW

Attachment A2: Public Land Survey 1/4, 1/4 Section, Township, Range

Trail Group	Trail Route Category	Township	Range	Section	QQ ID
Taft to Canyon	Existing Trails or Roadways - Improvements Needed	52	17	13	SWNW
Taft to Canyon	Existing Trails or Roadways - Improvements Needed	52	17	13	SWSW
Taft to Canyon	Existing Trails or Roadways - Improvements Needed	52	17	14	NENE
Taft to Canyon	Existing Trails or Roadways - Improvements Needed	52	17	14	SENE
Taft to Canyon	Existing Trails or Roadways - Improvements Needed	52	17	23	NESE
Taft to Canyon	Existing Trails or Roadways - Improvements Needed	52	17	23	SESE
Taft to Canyon	Existing Trails or Roadways - Improvements Needed	52	17	23	SESW
Taft to Canyon	Existing Trails or Roadways - Improvements Needed	52	17	23	SWSE
Taft to Canyon	Existing Trails or Roadways - Improvements Needed	52	17	24	NENW
Taft to Canyon	Existing Trails or Roadways - Improvements Needed	52	17	24	NESE
Taft to Canyon	Existing Trails or Roadways - Improvements Needed	52	17	24	NESW
Taft to Canyon	Existing Trails or Roadways - Improvements Needed	52	17	24	NWSE
Taft to Canyon	Existing Trails or Roadways - Improvements Needed	52	17	24	NWSW
Taft to Canyon	Existing Trails or Roadways - Improvements Needed	52	17	24	SENE
Taft to Canyon	Existing Trails or Roadways - Improvements Needed	52	17	24	SENW
Taft to Canyon	Existing Trails or Roadways - Improvements Needed	52	17	24	SESW
Taft to Canyon	Existing Trails or Roadways - Improvements Needed	52	17	24	SWNE
Taft to Canyon	Existing Trails or Roadways - Improvements Needed	52	17	24	SWSE
Taft to Canyon	Existing Trails or Roadways - Improvements Needed	52	17	25	NENE
Taft to Canyon	Existing Trails or Roadways - Improvements Needed	52	17	25	NWNE
Taft to Canyon	Existing Trails or Roadways - Improvements Needed	52	17	26	NENW
Taft to Canyon	Existing Trails or Roadways - Improvements Needed	52	17	26	Gov. Lot 3
Taft to Canyon	Existing Trails or Roadways - Improvements Needed	52	17	26	Gov. Lot 99
Taft to Canyon	Existing Trails or Roadways - Improvements Needed	53	16	27	SESW
Taft to Canyon	Existing Trails or Roadways - Improvements Needed	53	16	28	SWSW
Taft to Canyon	Existing Trails or Roadways - Improvements Needed	53	16	30	SESW
Taft to Canyon	Existing Trails or Roadways - Improvements Needed	53	16	30	Gov. Lot 4
Taft to Canyon	Existing Trails or Roadways - Improvements Needed	53	16	31	NENW
Taft to Canyon	Existing Trails or Roadways - Improvements Needed	53	16	31	NESE
Taft to Canyon	Existing Trails or Roadways - Improvements Needed	53	16	31	NESW
Taft to Canyon	Existing Trails or Roadways - Improvements Needed	53	16	31	NWSE
Taft to Canyon	Existing Trails or Roadways - Improvements Needed	53	16	31	SENW
Taft to Canyon	Existing Trails or Roadways - Improvements Needed	53	16	31	SESE
Taft to Canyon	Existing Trails or Roadways - Improvements Needed	53	16	31	SESW
Taft to Canyon	Existing Trails or Roadways - Improvements Needed	53	16	31	SWSE
Taft to Canyon	Existing Trails or Roadways - Improvements Needed	53	16	31	Gov. Lot 1
Taft to Canyon	Existing Trails or Roadways - Improvements Needed	53	16	32	NENE
Taft to Canyon	Existing Trails or Roadways - Improvements Needed	53	16	32	NESW
Taft to Canyon	Existing Trails or Roadways - Improvements Needed	53	16	32	NWNW
Taft to Canyon	Existing Trails or Roadways - Improvements Needed	53	16	32	NWSE
Taft to Canyon	Existing Trails or Roadways - Improvements Needed	53	16	32	NWSW
Taft to Canyon	Existing Trails or Roadways - Improvements Needed	53	16	32	SENE
Taft to Canyon	Existing Trails or Roadways - Improvements Needed	53	16	32	SESE
Taft to Canyon	Existing Trails or Roadways - Improvements Needed	53	16	32	SESW
Taft to Canyon	Existing Trails or Roadways - Improvements Needed	53	16	32	SWNE
Taft to Canyon	Existing Trails or Roadways - Improvements Needed	53	16	32	SWNW
Taft to Canyon	Existing Trails or Roadways - Improvements Needed	53	16	32	SWSE
Taft to Canyon	Existing Trails or Roadways - Improvements Needed	53	16	33	NENW
Taft to Canyon	Existing Trails or Roadways - Improvements Needed	53	16	33	NESW
Taft to Canyon	Existing Trails or Roadways - Improvements Needed	53	16	33	NWNW
Taft to Canyon	Existing Trails or Roadways - Improvements Needed	53	16	33	SENW
Taft to Canyon	Existing Trails or Roadways - Improvements Needed	53	16	33	SESW

Attachment A2: Public Land Survey 1/4, 1/4 Section, Township, Range

Trail Group	Trail Route Category	Township	Range	Section	QQ ID
Taft to Canyon	Existing Trails or Roadways - Improvements Needed	53	16	33	SWSW
Taft to Canyon	Existing Trails or Roadways - Improvements Needed	53	16	34	NENW
Taft to Canyon	Existing Trails or Roadways - Improvements Needed	53	16	34	NWNE
Taft to Canyon	Existing Trails or Roadways - Improvements Needed	53	16	34	NWSE
Taft to Canyon	Existing Trails or Roadways - Improvements Needed	53	16	34	SENW
Taft to Canyon	Existing Trails or Roadways - Improvements Needed	53	16	34	SWNE
Taft to Canyon	Existing Trails or Roadways - Improvements Needed	53	16	34	SWSE
Taft to Canyon	Proposed Route - New Construction Proposed for ATV Use	52	16	5	Gov. Lot 3
Taft to Canyon	Proposed Route - New Construction Proposed for ATV Use	52	16	17	SENW
Taft to Canyon	Proposed Route - New Construction Proposed for ATV Use	52	16	17	SWNE
Taft to Canyon	Proposed Route - New Construction Proposed for ATV Use	52	16	30	Gov. Lot 3
Taft to Canyon	Proposed Route - New Construction Proposed for ATV Use	52	17	12	SESW
Taft to Canyon	Proposed Route - New Construction Proposed for ATV Use	52	17	13	NENW
Taft to Canyon	Proposed Route - New Construction Proposed for ATV Use	52	17	13	NWNW
Taft to Canyon	Proposed Route - New Construction Proposed for ATV Use	52	17	13	SWNW
Taft to Canyon	Proposed Route - New Construction Proposed for ATV Use	53	16	32	SESW
West Lavaque Trail System	Existing Roadways Open to ATV Traffic - No Improvements Needed	51	15	3	NENE
West Lavaque Trail System	Existing Roadways Open to ATV Traffic - No Improvements Needed	51	15	3	NESE
West Lavaque Trail System	Existing Roadways Open to ATV Traffic - No Improvements Needed	51	15	3	SENE
West Lavaque Trail System	Existing Roadways Open to ATV Traffic - No Improvements Needed	51	15	3	SESE
West Lavaque Trail System	Existing Roadways Open to ATV Traffic - No Improvements Needed	51	15	10	NENE
West Lavaque Trail System	Existing Roadways Open to ATV Traffic - No Improvements Needed	51	15	10	NESE
West Lavaque Trail System	Existing Roadways Open to ATV Traffic - No Improvements Needed	51	15	10	SENE
West Lavaque Trail System	Existing Roadways Open to ATV Traffic - No Improvements Needed	51	15	10	SESE
West Lavaque Trail System	Existing Roadways Open to ATV Traffic - No Improvements Needed	51	15	15	NENE
West Lavaque Trail System	Existing Roadways Open to ATV Traffic - No Improvements Needed	51	15	15	NESE
West Lavaque Trail System	Existing Roadways Open to ATV Traffic - No Improvements Needed	51	15	15	SENE
West Lavaque Trail System	Existing Roadways Open to ATV Traffic - No Improvements Needed	51	15	15	SESE
West Lavaque Trail System	Existing Roadways Open to ATV Traffic - No Improvements Needed	51	15	17	SESW
West Lavaque Trail System	Existing Roadways Open to ATV Traffic - No Improvements Needed	51	15	17	SWNW
West Lavaque Trail System	Existing Roadways Open to ATV Traffic - No Improvements Needed	51	15	17	SWSW
West Lavaque Trail System	Existing Roadways Open to ATV Traffic - No Improvements Needed	51	15	18	NESE
West Lavaque Trail System	Existing Roadways Open to ATV Traffic - No Improvements Needed	51	15	18	SENE
West Lavaque Trail System	Existing Roadways Open to ATV Traffic - No Improvements Needed	51	15	18	SESE
West Lavaque Trail System	Existing Roadways Open to ATV Traffic - No Improvements Needed	51	15	19	NENE
West Lavaque Trail System	Existing Roadways Open to ATV Traffic - No Improvements Needed	51	15	19	NESE
West Lavaque Trail System	Existing Roadways Open to ATV Traffic - No Improvements Needed	51	15	19	SENE
West Lavaque Trail System	Existing Roadways Open to ATV Traffic - No Improvements Needed	51	15	19	SESE
West Lavaque Trail System	Existing Roadways Open to ATV Traffic - No Improvements Needed	51	15	20	NENE
West Lavaque Trail System	Existing Roadways Open to ATV Traffic - No Improvements Needed	51	15	20	NENW
West Lavaque Trail System	Existing Roadways Open to ATV Traffic - No Improvements Needed	51	15	20	NWNE
West Lavaque Trail System	Existing Roadways Open to ATV Traffic - No Improvements Needed	51	15	22	NENE
West Lavaque Trail System	Existing Roadways Open to ATV Traffic - No Improvements Needed	51	15	22	NESE
West Lavaque Trail System	Existing Roadways Open to ATV Traffic - No Improvements Needed	51	15	22	SENE
West Lavaque Trail System	Existing Roadways Open to ATV Traffic - No Improvements Needed	51	15	22	SESE
West Lavaque Trail System	Existing Roadways Open to ATV Traffic - No Improvements Needed	51	15	23	SWSW
West Lavaque Trail System	Existing Roadways Open to ATV Traffic - No Improvements Needed	51	15	26	NWNW
West Lavaque Trail System	Existing Roadways Open to ATV Traffic - No Improvements Needed	51	15	26	NWSW
West Lavaque Trail System	Existing Roadways Open to ATV Traffic - No Improvements Needed	51	15	26	SWNW
West Lavaque Trail System	Existing Roadways Open to ATV Traffic - No Improvements Needed	51	15	26	SWSW
West Lavaque Trail System	Existing Roadways Open to ATV Traffic - No Improvements Needed	51	15	30	NENE
West Lavaque Trail System	Existing Roadways Open to ATV Traffic - No Improvements Needed	51	15	30	SENE

Attachment A2: Public Land Survey 1/4, 1/4 Section, Township, Range

Trail Group	Trail Route Category	Township	Range	Section	QQ ID
West Lavaque Trail System	Existing Roadways Open to ATV Traffic - No Improvements Needed	51	15	30	Gov. Lot 4
West Lavaque Trail System	Existing Roadways Open to ATV Traffic - No Improvements Needed	51	15	31	Gov. Lot 1
West Lavaque Trail System	Existing Roadways Open to ATV Traffic - No Improvements Needed	51	15	32	NENE
West Lavaque Trail System	Existing Roadways Open to ATV Traffic - No Improvements Needed	51	15	32	NENW
West Lavaque Trail System	Existing Roadways Open to ATV Traffic - No Improvements Needed	51	15	32	NWNE
West Lavaque Trail System	Existing Roadways Open to ATV Traffic - No Improvements Needed	51	15	32	NWNW
West Lavaque Trail System	Existing Roadways Open to ATV Traffic - No Improvements Needed	51	15	33	NENE
West Lavaque Trail System	Existing Roadways Open to ATV Traffic - No Improvements Needed	51	15	33	NENW
West Lavaque Trail System	Existing Roadways Open to ATV Traffic - No Improvements Needed	51	15	33	NWNE
West Lavaque Trail System	Existing Roadways Open to ATV Traffic - No Improvements Needed	51	15	33	NWNW
West Lavaque Trail System	Existing Roadways Open to ATV Traffic - No Improvements Needed	51	15	34	NENE
West Lavaque Trail System	Existing Roadways Open to ATV Traffic - No Improvements Needed	51	15	34	NENW
West Lavaque Trail System	Existing Roadways Open to ATV Traffic - No Improvements Needed	51	15	34	NWNE
West Lavaque Trail System	Existing Roadways Open to ATV Traffic - No Improvements Needed	51	15	34	NWNW
West Lavaque Trail System	Existing Roadways Open to ATV Traffic - No Improvements Needed	51	15	35	NWNW
West Lavaque Trail System	Existing Roadways Open to ATV Traffic - No Improvements Needed	52	15	27	SESE
West Lavaque Trail System	Existing Roadways Open to ATV Traffic - No Improvements Needed	52	15	27	SESW
West Lavaque Trail System	Existing Roadways Open to ATV Traffic - No Improvements Needed	52	15	27	SWSE
West Lavaque Trail System	Existing Roadways Open to ATV Traffic - No Improvements Needed	52	15	27	SWSW
West Lavaque Trail System	Existing Roadways Open to ATV Traffic - No Improvements Needed	52	15	28	SESE
West Lavaque Trail System	Existing Roadways Open to ATV Traffic - No Improvements Needed	52	15	34	NENE
West Lavaque Trail System	Existing Roadways Open to ATV Traffic - No Improvements Needed	52	15	34	NENW
West Lavaque Trail System	Existing Roadways Open to ATV Traffic - No Improvements Needed	52	15	34	NESE
West Lavaque Trail System	Existing Roadways Open to ATV Traffic - No Improvements Needed	52	15	34	NWNW
West Lavaque Trail System	Existing Roadways Open to ATV Traffic - No Improvements Needed	52	15	34	SENE
West Lavaque Trail System	Existing Roadways Open to ATV Traffic - No Improvements Needed	52	15	34	SESE
West Lavaque Trail System	Existing Roadways Open to ATV Traffic - No Improvements Needed	52	15	35	NWNW
West Lavaque Trail System	Existing Trails or Roadways - Improvements Needed	51	15	4	NENW
West Lavaque Trail System	Existing Trails or Roadways - Improvements Needed	51	15	4	NESW
West Lavaque Trail System	Existing Trails or Roadways - Improvements Needed	51	15	4	NWNW
West Lavaque Trail System	Existing Trails or Roadways - Improvements Needed	51	15	4	NWSW
West Lavaque Trail System	Existing Trails or Roadways - Improvements Needed	51	15	4	SENW
West Lavaque Trail System	Existing Trails or Roadways - Improvements Needed	51	15	4	SESW
West Lavaque Trail System	Existing Trails or Roadways - Improvements Needed	51	15	4	SWNW
West Lavaque Trail System	Existing Trails or Roadways - Improvements Needed	51	15	4	SWSW
West Lavaque Trail System	Existing Trails or Roadways - Improvements Needed	51	15	5	SENE
West Lavaque Trail System	Existing Trails or Roadways - Improvements Needed	51	15	5	SESE
West Lavaque Trail System	Existing Trails or Roadways - Improvements Needed	51	15	8	NENE
West Lavaque Trail System	Existing Trails or Roadways - Improvements Needed	51	15	8	NESE
West Lavaque Trail System	Existing Trails or Roadways - Improvements Needed	51	15	8	NWNE
West Lavaque Trail System	Existing Trails or Roadways - Improvements Needed	51	15	8	SENE
West Lavaque Trail System	Existing Trails or Roadways - Improvements Needed	51	15	8	SESE
West Lavaque Trail System	Existing Trails or Roadways - Improvements Needed	51	15	8	SWNE
West Lavaque Trail System	Existing Trails or Roadways - Improvements Needed	51	15	17	NENE
West Lavaque Trail System	Existing Trails or Roadways - Improvements Needed	51	15	17	NESE
West Lavaque Trail System	Existing Trails or Roadways - Improvements Needed	51	15	17	NESW
West Lavaque Trail System	Existing Trails or Roadways - Improvements Needed	51	15	17	NWSE
West Lavaque Trail System	Existing Trails or Roadways - Improvements Needed	51	15	17	SENE
West Lavaque Trail System	Existing Trails or Roadways - Improvements Needed	51	15	17	SENW
West Lavaque Trail System	Existing Trails or Roadways - Improvements Needed	51	15	17	SESE
West Lavaque Trail System	Existing Trails or Roadways - Improvements Needed	51	15	17	SWNE
West Lavaque Trail System	Existing Trails or Roadways - Improvements Needed	51	15	17	SWNW

Attachment A2: Public Land Survey 1/4, 1/4 Section, Township, Range

Trail Group	Trail Route Category	Township	Range	Section	QQ ID
West Lavaque Trail System	Existing Trails or Roadways - Improvements Needed	51	15	17	SWSE
West Lavaque Trail System	Existing Trails or Roadways - Improvements Needed	51	15	18	SENE
West Lavaque Trail System	Existing Trails or Roadways - Improvements Needed	51	15	20	NENE
West Lavaque Trail System	Existing Trails or Roadways - Improvements Needed	52	15	27	SESE
West Lavaque Trail System	Existing Trails or Roadways - Improvements Needed	52	15	27	SWSW
West Lavaque Trail System	Existing Trails or Roadways - Improvements Needed	52	15	28	SESE
West Lavaque Trail System	Existing Trails or Roadways - Improvements Needed	52	15	33	NENE
West Lavaque Trail System	Existing Trails or Roadways - Improvements Needed	52	15	33	NESE
West Lavaque Trail System	Existing Trails or Roadways - Improvements Needed	52	15	33	NWSE
West Lavaque Trail System	Existing Trails or Roadways - Improvements Needed	52	15	33	SENE
West Lavaque Trail System	Existing Trails or Roadways - Improvements Needed	52	15	33	SESW
West Lavaque Trail System	Existing Trails or Roadways - Improvements Needed	52	15	33	SWSE
West Lavaque Trail System	Existing Trails or Roadways - Improvements Needed	52	15	34	NENE
West Lavaque Trail System	Existing Trails or Roadways - Improvements Needed	52	15	34	NENW
West Lavaque Trail System	Existing Trails or Roadways - Improvements Needed	52	15	34	NWNE
West Lavaque Trail System	Existing Trails or Roadways - Improvements Needed	52	15	34	SENW
West Lavaque Trail System	Existing Trails or Roadways - Improvements Needed	52	15	34	SWNE
West Lavaque Trail System	Existing Trails or Roadways - Improvements Needed	52	15	34	SWNW

Attachment A3: Tax Parcels

Trail Group	Parcel Number	Ownership Type	Owner Name	Trail Route Category	Preferred or Alternate
Brookston Loops	400-0010-03140	Private	EMBERSON TEAGAN J	Existing Trails or Roadways - Improvements Needed	Alternate
Brookston Loops	310-0010-03390	Private	GOLEN MARY A	Existing Trails or Roadways - Improvements Needed	Preferred
Brookston Loops	310-0010-02790	Private	HINK MICHAEL ETAL	Existing Trails or Roadways - Improvements Needed	Preferred
Brookston Loops	400-0010-02873	Private	JOHNSON BRUCE	Existing Trails or Roadways - Improvements Needed	Alternate
Brookston Loops	400-0010-03170	Private	LAMB STANLEY A	Existing Trails or Roadways - Improvements Needed	Alternate
Brookston Loops	400-0010-03145	Private	LAMB STANLEY A ETUX	Existing Trails or Roadways - Improvements Needed	Alternate
Brookston Loops	400-0010-03175	Private	LAMB STANLEY A ETUX	Existing Trails or Roadways - Improvements Needed	Alternate
Brookston Loops	400-0010-03370	Private	LEPAGE CAREY P	Existing Trails or Roadways - Improvements Needed	Alternate
Brookston Loops	310-0010-02650	Private	PIRILA KAITLYN J	Existing Trails or Roadways - Improvements Needed	Preferred
Brookston Loops	400-0010-03120	Private	SEAMAN ROBERT E	Existing Trails or Roadways - Improvements Needed	Alternate
Brookston Loops	310-0010-03400	County Fee	ST LOUIS COUNTY	Existing Trails or Roadways - Improvements Needed	Preferred
Brookston Loops	400-0010-03380	State	ST OF MN	Existing Trails or Roadways - Improvements Needed	Alternate
Brookston Loops	400-0010-05200	State	ST OF MN	Existing Trails or Roadways - Improvements Needed	Preferred
Brookston Loops	225-0020-01870	Tax Forfeit	ST OF MN C278 L35	Existing Trails or Roadways - Improvements Needed	Preferred
Brookston Loops	225-0020-01890	Tax Forfeit	ST OF MN C278 L35	Existing Trails or Roadways - Improvements Needed	Preferred
Brookston Loops	225-0020-01930	Tax Forfeit	ST OF MN C278 L35	Existing Trails or Roadways - Improvements Needed	Alternate
Brookston Loops	225-0020-01930	Tax Forfeit	ST OF MN C278 L35	Existing Trails or Roadways - Improvements Needed	Preferred
Brookston Loops	225-0020-02010	Tax Forfeit	ST OF MN C278 L35	Existing Trails or Roadways - Improvements Needed	Preferred
Brookston Loops	225-0020-02060	Tax Forfeit	ST OF MN C278 L35	Existing Trails or Roadways - Improvements Needed	Preferred
Brookston Loops	225-0020-02070	Tax Forfeit	ST OF MN C278 L35	Existing Trails or Roadways - Improvements Needed	Preferred
Brookston Loops	225-0020-02080	Tax Forfeit	ST OF MN C278 L35	Existing Trails or Roadways - Improvements Needed	Preferred
Brookston Loops	225-0020-02090	Tax Forfeit	ST OF MN C278 L35	Existing Trails or Roadways - Improvements Needed	Alternate
Brookston Loops	225-0020-02090	Tax Forfeit	ST OF MN C278 L35	Existing Trails or Roadways - Improvements Needed	Preferred
Brookston Loops	225-0020-02150	Tax Forfeit	ST OF MN C278 L35	Existing Trails or Roadways - Improvements Needed	Alternate
Brookston Loops	225-0020-02150	Tax Forfeit	ST OF MN C278 L35	Existing Trails or Roadways - Improvements Needed	Preferred
Brookston Loops	225-0020-02170	Tax Forfeit	ST OF MN C278 L35	Existing Trails or Roadways - Improvements Needed	Alternate
Brookston Loops	225-0020-02170	Tax Forfeit	ST OF MN C278 L35	Existing Trails or Roadways - Improvements Needed	Preferred
Brookston Loops	225-0020-03450	Tax Forfeit	ST OF MN C278 L35	Existing Trails or Roadways - Improvements Needed	Preferred
Brookston Loops	225-0020-03530	Tax Forfeit	ST OF MN C278 L35	Existing Trails or Roadways - Improvements Needed	Preferred
Brookston Loops	225-0020-03690	Tax Forfeit	ST OF MN C278 L35	Existing Trails or Roadways - Improvements Needed	Preferred
Brookston Loops	225-0020-03850	Tax Forfeit	ST OF MN C278 L35	Existing Trails or Roadways - Improvements Needed	Preferred
Brookston Loops	225-0060-00010	Tax Forfeit	ST OF MN C278 L35	Existing Trails or Roadways - Improvements Needed	Preferred
Brookston Loops	310-0010-01060	Tax Forfeit	ST OF MN C278 L35	Existing Trails or Roadways - Improvements Needed	Preferred
Brookston Loops	310-0010-01120	Tax Forfeit	ST OF MN C278 L35	Existing Trails or Roadways - Improvements Needed	Preferred
Brookston Loops	310-0010-01160	Tax Forfeit	ST OF MN C278 L35	Existing Trails or Roadways - Improvements Needed	Preferred
Brookston Loops	310-0010-02800	Tax Forfeit	ST OF MN C278 L35	Existing Trails or Roadways - Improvements Needed	Preferred
Brookston Loops	310-0010-03000	Tax Forfeit	ST OF MN C278 L35	Existing Trails or Roadways - Improvements Needed	Preferred
Brookston Loops	310-0010-03020	Tax Forfeit	ST OF MN C278 L35	Existing Trails or Roadways - Improvements Needed	Preferred
Brookston Loops	310-0010-03180	Tax Forfeit	ST OF MN C278 L35	Existing Trails or Roadways - Improvements Needed	Preferred
Brookston Loops	310-0010-03350	Tax Forfeit	ST OF MN C278 L35	Existing Trails or Roadways - Improvements Needed	Preferred
Brookston Loops	310-0010-03360	Tax Forfeit	ST OF MN C278 L35	Existing Trails or Roadways - Improvements Needed	Preferred
Brookston Loops	310-0010-03380	Tax Forfeit	ST OF MN C278 L35	Existing Trails or Roadways - Improvements Needed	Preferred
Brookston Loops	310-0010-03410	Tax Forfeit	ST OF MN C278 L35	Existing Trails or Roadways - Improvements Needed	Preferred
Brookston Loops	310-0010-03420	Tax Forfeit	ST OF MN C278 L35	Existing Trails or Roadways - Improvements Needed	Preferred
Brookston Loops	310-0010-04140	Tax Forfeit	ST OF MN C278 L35	Existing Trails or Roadways - Improvements Needed	Preferred
Brookston Loops	310-0010-04410	Tax Forfeit	ST OF MN C278 L35	Existing Trails or Roadways - Improvements Needed	Preferred
Brookston Loops	310-0010-04420	Tax Forfeit	ST OF MN C278 L35	Existing Trails or Roadways - Improvements Needed	Preferred
Brookston Loops	310-0010-04570	Tax Forfeit	ST OF MN C278 L35	Existing Trails or Roadways - Improvements Needed	Preferred
Brookston Loops	310-0010-04580	Tax Forfeit	ST OF MN C278 L35	Existing Trails or Roadways - Improvements Needed	Preferred
Brookston Loops	310-0010-04810	Tax Forfeit	ST OF MN C278 L35	Existing Trails or Roadways - Improvements Needed	Preferred
Brookston Loops	310-0010-04850	Tax Forfeit	ST OF MN C278 L35	Existing Trails or Roadways - Improvements Needed	Preferred
Brookston Loops	310-0010-04860	Tax Forfeit	ST OF MN C278 L35	Existing Trails or Roadways - Improvements Needed	Preferred
Brookston Loops	400-0010-03150	Tax Forfeit	ST OF MN C278 L35	Existing Trails or Roadways - Improvements Needed	Preferred
Brookston Loops	400-0010-03160	Tax Forfeit	ST OF MN C278 L35	Existing Trails or Roadways - Improvements Needed	Alternate
Brookston Loops	400-0010-03160	Tax Forfeit	ST OF MN C278 L35	Existing Trails or Roadways - Improvements Needed	Preferred
Brookston Loops	400-0010-03220	Tax Forfeit	ST OF MN C278 L35	Existing Trails or Roadways - Improvements Needed	Preferred
Brookston Loops	400-0010-05160	Tax Forfeit	ST OF MN C278 L35	Existing Trails or Roadways - Improvements Needed	Preferred
Brookston Loops	400-0010-05210	Tax Forfeit	ST OF MN C278 L35	Existing Trails or Roadways - Improvements Needed	Preferred
Brookston Loops	225-0020-01870	Tax Forfeit	ST OF MN C278 L35	Proposed Route - New Construction Proposed for ATV Use	Preferred
Brookston Loops	225-0020-01890	Tax Forfeit	ST OF MN C278 L35	Proposed Route - New Construction Proposed for ATV Use	Preferred
Brookston Loops	310-0010-01060	Tax Forfeit	ST OF MN C278 L35	Proposed Route - New Construction Proposed for ATV Use	Preferred
Brookston Loops	310-0010-01160	Tax Forfeit	ST OF MN C278 L35	Proposed Route - New Construction Proposed for ATV Use	Preferred
Brookston Loops	310-0010-01240	Tax Forfeit	ST OF MN C278 L35	Proposed Route - New Construction Proposed for ATV Use	Preferred
Brookston Loops	310-0010-01260	Tax Forfeit	ST OF MN C278 L35	Proposed Route - New Construction Proposed for ATV Use	Preferred
Brookston Loops	310-0010-04570	Tax Forfeit	ST OF MN C278 L35	Proposed Route - New Construction Proposed for ATV Use	Preferred
Brookston Loops	310-0010-04580	Tax Forfeit	ST OF MN C278 L35	Proposed Route - New Construction Proposed for ATV Use	Preferred
Brookston Loops	400-0010-03150	Tax Forfeit	ST OF MN C278 L35	Proposed Route - New Construction Proposed for ATV Use	Preferred
Brookston Loops	310-0010-04430	State	STATE OF MINNESOTA	Existing Trails or Roadways - Improvements Needed	Preferred
Brookston Loops	310-0010-04560	State	STATE OF MINNESOTA	Proposed Route - New Construction Proposed for ATV Use	Preferred
Brookston Loops	310-0010-04610	State	STATE OF MINNESOTA	Proposed Route - New Construction Proposed for ATV Use	Preferred
Brookston Loops	310-0010-00830	Private	TAKANEN SHAWN	Proposed Route - New Construction Proposed for ATV Use	Preferred
Brookston Loops	310-0010-04490	Private	TEN BEAR PAMELA	Existing Trails or Roadways - Improvements Needed	Preferred
Canyon to Cotton	375-0020-02770	Private	ALLETE INC	Existing Trails or Roadways - Improvements Needed	Preferred
Canyon to Cotton	660-0010-02030	Private	ALLETE INC	Existing Trails or Roadways - Improvements Needed	Preferred
Canyon to Cotton	660-0010-02200	Private	ALLETE INC	Existing Trails or Roadways - Improvements Needed	Preferred

Attachment A3: Tax Parcels

Trail Group	Parcel Number	Ownership Type	Owner Name	Trail Route Category	Preferred or Alternate
Canyon to Cotton	380-0020-02256	Private	ANDRYS MATTHEW D	Existing Trails or Roadways - Improvements Needed	Preferred
Canyon to Cotton	380-0020-02250	Private	GUTMANN CHERYL D	Existing Trails or Roadways - Improvements Needed	Preferred
Canyon to Cotton	380-0020-02254	Private	HALDORSON LUCAS	Existing Trails or Roadways - Improvements Needed	Preferred
Canyon to Cotton	380-0020-02190	Private	HANSEN STEVEN JON	Existing Trails or Roadways - Improvements Needed	Preferred
Canyon to Cotton	660-0010-01660	Private	POHL ROBERT J ETAL	Existing Trails or Roadways - Improvements Needed	Alternate
Canyon to Cotton	660-0010-01670	Private	POHL ROBERT J ETAL	Existing Trails or Roadways - Improvements Needed	Alternate
Canyon to Cotton	660-0010-01670	Private	POHL ROBERT J ETAL	Existing Trails or Roadways - Improvements Needed	Preferred
Canyon to Cotton	380-0020-01806	County Fee	ST LOUIS COUNTY	Existing Trails or Roadways - Improvements Needed	Preferred
Canyon to Cotton	660-0010-01150	County Fee	ST LOUIS COUNTY	Existing Trails or Roadways - Improvements Needed	Preferred
Canyon to Cotton	660-0010-01320	County Fee	ST LOUIS COUNTY	Existing Trails or Roadways - Improvements Needed	Preferred
Canyon to Cotton	660-0010-02880	County Fee	ST LOUIS COUNTY	Existing Trails or Roadways - Improvements Needed	Alternate
Canyon to Cotton	660-0010-02880	County Fee	ST LOUIS COUNTY	Existing Trails or Roadways - Improvements Needed	Preferred
Canyon to Cotton	673-0010-02095	County Fee	ST LOUIS COUNTY	Existing Trails or Roadways - Improvements Needed	Preferred
Canyon to Cotton	673-0010-03566	County Fee	ST LOUIS COUNTY	Existing Trails or Roadways - Improvements Needed	Preferred
Canyon to Cotton	673-0010-03745	County Fee	ST LOUIS COUNTY	Existing Trails or Roadways - Improvements Needed	Preferred
Canyon to Cotton	673-0010-03985	County Fee	ST LOUIS COUNTY	Existing Trails or Roadways - Improvements Needed	Alternate
Canyon to Cotton	673-0010-03985	County Fee	ST LOUIS COUNTY	Existing Trails or Roadways - Improvements Needed	Preferred
Canyon to Cotton	673-0010-04236	County Fee	ST LOUIS COUNTY	Existing Trails or Roadways - Improvements Needed	Alternate
Canyon to Cotton	673-0010-04236	County Fee	ST LOUIS COUNTY	Existing Trails or Roadways - Improvements Needed	Preferred
Canyon to Cotton	375-0020-00980	Tax Forfeit	ST OF MN C278 L35	Existing Trails or Roadways - Improvements Needed	Preferred
Canyon to Cotton	380-0020-00170	Tax Forfeit	ST OF MN C278 L35	Existing Trails or Roadways - Improvements Needed	Preferred
Canyon to Cotton	380-0020-01620	Tax Forfeit	ST OF MN C278 L35	Existing Trails or Roadways - Improvements Needed	Preferred
Canyon to Cotton	380-0020-02200	Tax Forfeit	ST OF MN C278 L35	Existing Trails or Roadways - Improvements Needed	Preferred
Canyon to Cotton	660-0010-00010	Tax Forfeit	ST OF MN C278 L35	Existing Trails or Roadways - Improvements Needed	Preferred
Canyon to Cotton	660-0010-00330	Tax Forfeit	ST OF MN C278 L35	Existing Trails or Roadways - Improvements Needed	Preferred
Canyon to Cotton	660-0010-00490	Tax Forfeit	ST OF MN C278 L35	Existing Trails or Roadways - Improvements Needed	Preferred
Canyon to Cotton	660-0010-00660	Tax Forfeit	ST OF MN C278 L35	Existing Trails or Roadways - Improvements Needed	Preferred
Canyon to Cotton	660-0010-01160	Tax Forfeit	ST OF MN C278 L35	Existing Trails or Roadways - Improvements Needed	Preferred
Canyon to Cotton	660-0010-01330	Tax Forfeit	ST OF MN C278 L35	Existing Trails or Roadways - Improvements Needed	Preferred
Canyon to Cotton	660-0010-01490	Tax Forfeit	ST OF MN C278 L35	Existing Trails or Roadways - Improvements Needed	Preferred
Canyon to Cotton	660-0010-01650	Tax Forfeit	ST OF MN C278 L35	Existing Trails or Roadways - Improvements Needed	Alternate
Canyon to Cotton	660-0010-01650	Tax Forfeit	ST OF MN C278 L35	Existing Trails or Roadways - Improvements Needed	Preferred
Canyon to Cotton	660-0010-01810	Tax Forfeit	ST OF MN C278 L35	Existing Trails or Roadways - Improvements Needed	Preferred
Canyon to Cotton	660-0010-01970	Tax Forfeit	ST OF MN C278 L35	Existing Trails or Roadways - Improvements Needed	Preferred
Canyon to Cotton	660-0010-02080	Tax Forfeit	ST OF MN C278 L35	Existing Trails or Roadways - Improvements Needed	Preferred
Canyon to Cotton	660-0010-02240	Tax Forfeit	ST OF MN C278 L35	Existing Trails or Roadways - Improvements Needed	Preferred
Canyon to Cotton	660-0010-02570	Tax Forfeit	ST OF MN C278 L35	Existing Trails or Roadways - Improvements Needed	Preferred
Canyon to Cotton	660-0010-02720	Tax Forfeit	ST OF MN C278 L35	Existing Trails or Roadways - Improvements Needed	Alternate
Canyon to Cotton	660-0010-03050	Tax Forfeit	ST OF MN C278 L35	Existing Trails or Roadways - Improvements Needed	Preferred
Canyon to Cotton	660-0010-03210	Tax Forfeit	ST OF MN C278 L35	Existing Trails or Roadways - Improvements Needed	Preferred
Canyon to Cotton	660-0010-03370	Tax Forfeit	ST OF MN C278 L35	Existing Trails or Roadways - Improvements Needed	Preferred
Canyon to Cotton	660-0010-04280	Tax Forfeit	ST OF MN C278 L35	Existing Trails or Roadways - Improvements Needed	Preferred
Canyon to Cotton	660-0010-04440	Tax Forfeit	ST OF MN C278 L35	Existing Trails or Roadways - Improvements Needed	Preferred
Canyon to Cotton	660-0010-04600	Tax Forfeit	ST OF MN C278 L35	Existing Trails or Roadways - Improvements Needed	Preferred
Canyon to Cotton	673-0010-00350	Tax Forfeit	ST OF MN C278 L35	Existing Trails or Roadways - Improvements Needed	Preferred
Canyon to Cotton	673-0010-01280	Tax Forfeit	ST OF MN C278 L35	Existing Trails or Roadways - Improvements Needed	Preferred
Canyon to Cotton	673-0010-01450	Tax Forfeit	ST OF MN C278 L35	Existing Trails or Roadways - Improvements Needed	Preferred
Canyon to Cotton	673-0010-01940	Tax Forfeit	ST OF MN C278 L35	Existing Trails or Roadways - Improvements Needed	Alternate
Canyon to Cotton	673-0010-02280	Tax Forfeit	ST OF MN C278 L35	Existing Trails or Roadways - Improvements Needed	Preferred
Canyon to Cotton	673-0010-02920	Tax Forfeit	ST OF MN C278 L35	Existing Trails or Roadways - Improvements Needed	Preferred
Canyon to Cotton	673-0010-03080	Tax Forfeit	ST OF MN C278 L35	Existing Trails or Roadways - Improvements Needed	Preferred
Canyon to Cotton	673-0010-03240	Tax Forfeit	ST OF MN C278 L35	Existing Trails or Roadways - Improvements Needed	Preferred
Canyon to Cotton	673-0010-03410	Tax Forfeit	ST OF MN C278 L35	Existing Trails or Roadways - Improvements Needed	Alternate
Canyon to Cotton	673-0010-03580	Tax Forfeit	ST OF MN C278 L35	Existing Trails or Roadways - Improvements Needed	Alternate
Canyon to Cotton	673-0010-03750	Tax Forfeit	ST OF MN C278 L35	Existing Trails or Roadways - Improvements Needed	Preferred
Canyon to Cotton	673-0010-03910	Tax Forfeit	ST OF MN C278 L35	Existing Trails or Roadways - Improvements Needed	Alternate
Canyon to Cotton	673-0010-03910	Tax Forfeit	ST OF MN C278 L35	Existing Trails or Roadways - Improvements Needed	Preferred
Canyon to Cotton	673-0010-04080	Tax Forfeit	ST OF MN C278 L35	Existing Trails or Roadways - Improvements Needed	Preferred
Canyon to Cotton	673-0010-04420	Tax Forfeit	ST OF MN C278 L35	Existing Trails or Roadways - Improvements Needed	Preferred
Canyon to Cotton	673-0010-04890	Tax Forfeit	ST OF MN C278 L35	Existing Trails or Roadways - Improvements Needed	Preferred
Canyon to Cotton	673-0010-05210	Tax Forfeit	ST OF MN C278 L35	Existing Trails or Roadways - Improvements Needed	Preferred
Canyon to Cotton	673-0010-05380	Tax Forfeit	ST OF MN C278 L35	Existing Trails or Roadways - Improvements Needed	Preferred
Canyon to Cotton	660-0010-00180	Tax Forfeit	ST OF MN C278 L35	Proposed Route - New Construction Proposed for ATV Use	Alternate
Canyon to Cotton	660-0010-00230	Tax Forfeit	ST OF MN C278 L35	Proposed Route - New Construction Proposed for ATV Use	Preferred
Canyon to Cotton	660-0010-00330	Tax Forfeit	ST OF MN C278 L35	Proposed Route - New Construction Proposed for ATV Use	Preferred
Canyon to Cotton	660-0010-01490	Tax Forfeit	ST OF MN C278 L35	Proposed Route - New Construction Proposed for ATV Use	Alternate
Canyon to Cotton	660-0010-01490	Tax Forfeit	ST OF MN C278 L35	Proposed Route - New Construction Proposed for ATV Use	Preferred
Canyon to Cotton	660-0010-01650	Tax Forfeit	ST OF MN C278 L35	Proposed Route - New Construction Proposed for ATV Use	Alternate
Canyon to Cotton	660-0010-02080	Tax Forfeit	ST OF MN C278 L35	Proposed Route - New Construction Proposed for ATV Use	Alternate
Canyon to Cotton	660-0010-02400	State	STATE OF MINNESOTA	Existing Trails or Roadways - Improvements Needed	Preferred
Canyon to Cotton	661-0010-05750	State	STATE OF MINNESOTA	Existing Trails or Roadways - Improvements Needed	Preferred
Canyon to Cotton	673-0010-03180	State	STATE OF MINNESOTA	Existing Trails or Roadways - Improvements Needed	Preferred
Canyon to Cotton	673-0010-04410	State	STATE OF MINNESOTA	Existing Trails or Roadways - Improvements Needed	Preferred
Canyon to Cotton	673-0010-05630	State	STATE OF MINNESOTA	Existing Trails or Roadways - Improvements Needed	Preferred
Canyon to Cotton	380-0020-02382	Municipal	TOWN OF GRAND LAKE	Existing Trails or Roadways - Improvements Needed	Preferred

Attachment A3: Tax Parcels

Trail Group	Parcel Number	Ownership Type	Owner Name	Trail Route Category	Preferred or Alternate
Canyon to Cotton	673-0010-03565	Unknown	UNKNOWN	Existing Trails or Roadways - Improvements Needed	Preferred
Canyon to Cotton	380-0020-02192	Private	WATERHOUSE EDWIN P ETUX	Existing Trails or Roadways - Improvements Needed	Preferred
Canyon to Cotton	660-0010-00310	Private	WATERS JACOB & KATHARINE VANEVERA	Proposed Route - New Construction Proposed for ATV Use	Alternate
Canyon to Cotton	380-0020-02196	Private	WAXVIK SCOTT D	Existing Trails or Roadways - Improvements Needed	Preferred
Cross Roads Connector	275-0010-00170	State	STATE OF MINNESOTA	Existing Trails or Roadways - Improvements Needed	Preferred
Cross Roads Connector	275-0010-00260	State	STATE OF MINNESOTA	Existing Trails or Roadways - Improvements Needed	Preferred
Cross Roads Connector	275-0010-00376	State	STATE OF MINNESOTA	Existing Trails or Roadways - Improvements Needed	Preferred
Floodwood Loop	225-0020-01050	Tax Forfeit	ST OF MN C278 L35	Existing Trails or Roadways - Improvements Needed	Preferred
Floodwood Loop	225-0020-02570	Tax Forfeit	ST OF MN C278 L35	Existing Trails or Roadways - Improvements Needed	Preferred
Floodwood Loop	225-0020-02730	Tax Forfeit	ST OF MN C278 L35	Existing Trails or Roadways - Improvements Needed	Preferred
Floodwood Loop	225-0020-02890	Tax Forfeit	ST OF MN C278 L35	Existing Trails or Roadways - Improvements Needed	Preferred
Floodwood Loop	225-0020-03050	Tax Forfeit	ST OF MN C278 L35	Existing Trails or Roadways - Improvements Needed	Preferred
Floodwood Loop	225-0020-03210	Tax Forfeit	ST OF MN C278 L35	Existing Trails or Roadways - Improvements Needed	Preferred
Floodwood Loop	225-0020-03430	Tax Forfeit	ST OF MN C278 L35	Existing Trails or Roadways - Improvements Needed	Preferred
Floodwood Loop	225-0020-03450	Tax Forfeit	ST OF MN C278 L35	Existing Trails or Roadways - Improvements Needed	Preferred
Floodwood Loop	225-0020-03530	Tax Forfeit	ST OF MN C278 L35	Existing Trails or Roadways - Improvements Needed	Preferred
Floodwood Loop	360-0010-03810	Tax Forfeit	ST OF MN C278 L35	Existing Trails or Roadways - Improvements Needed	Preferred
Floodwood Loop	360-0010-03970	Tax Forfeit	ST OF MN C278 L35	Existing Trails or Roadways - Improvements Needed	Preferred
Floodwood Loop	360-0010-01950	Tax Forfeit	ST OF MN C278 L35	Existing Trails or Roadways - Improvements Needed	Preferred
Floodwood Loop	360-0010-01960	Tax Forfeit	ST OF MN C278 L35	Existing Trails or Roadways - Improvements Needed	Preferred
Floodwood Loop	360-0010-02000	Tax Forfeit	ST OF MN C278 L35	Existing Trails or Roadways - Improvements Needed	Preferred
Floodwood Loop	360-0010-02160	Tax Forfeit	ST OF MN C278 L35	Existing Trails or Roadways - Improvements Needed	Preferred
Floodwood Loop	360-0010-02320	Tax Forfeit	ST OF MN C278 L36	Existing Trails or Roadways - Improvements Needed	Preferred
Lumberjack Extension	380-0020-02350	Private	ALLETE INC	Existing Trails or Roadways - Improvements Needed	Preferred
Lumberjack Extension	400-0010-01910	Private	BLACK SPRUCE 7160 LLC	Proposed Route - New Construction Proposed for ATV Use	Preferred
Lumberjack Extension	400-0010-01920	Private	BLACK SPRUCE 7160 LLC	Proposed Route - New Construction Proposed for ATV Use	Preferred
Lumberjack Extension	400-0010-02174	Private	LANE MARGARET H	Existing Trails or Roadways - Improvements Needed	Preferred
Lumberjack Extension	400-0010-06190	Private	SHEMON LARRY L ETUX	Existing Trails or Roadways - Improvements Needed	Preferred
Lumberjack Extension	400-0010-06220	Private	SHEMON LARRY L ETUX	Existing Trails or Roadways - Improvements Needed	Preferred
Lumberjack Extension	400-0010-06245	Private	SHEMON LARRY L ETUX	Existing Trails or Roadways - Improvements Needed	Preferred
Lumberjack Extension	400-0010-02080	Private	SHOOP PRICE TRUST	Existing Trails or Roadways - Improvements Needed	Preferred
Lumberjack Extension	380-0010-00795	County Fee	ST LOUIS COUNTY	Existing Trails or Roadways - Improvements Needed	Preferred
Lumberjack Extension	380-0010-01095	County Fee	ST LOUIS COUNTY	Existing Trails or Roadways - Improvements Needed	Preferred
Lumberjack Extension	380-0010-01355	County Fee	ST LOUIS COUNTY	Existing Trails or Roadways - Improvements Needed	Preferred
Lumberjack Extension	380-0020-03695	County Fee	ST LOUIS COUNTY	Existing Trails or Roadways - Improvements Needed	Preferred
Lumberjack Extension	380-0020-03895	County Fee	ST LOUIS COUNTY	Existing Trails or Roadways - Improvements Needed	Preferred
Lumberjack Extension	380-0020-04685	County Fee	ST LOUIS COUNTY	Existing Trails or Roadways - Improvements Needed	Preferred
Lumberjack Extension	380-0020-04835	County Fee	ST LOUIS COUNTY	Existing Trails or Roadways - Improvements Needed	Preferred
Lumberjack Extension	380-0020-05635	County Fee	ST LOUIS COUNTY	Existing Trails or Roadways - Improvements Needed	Preferred
Lumberjack Extension	380-0010-00910	Tax Forfeit	ST OF MN C278 L35	Existing Trails or Roadways - Improvements Needed	Preferred
Lumberjack Extension	380-0010-01030	Tax Forfeit	ST OF MN C278 L35	Existing Trails or Roadways - Improvements Needed	Preferred
Lumberjack Extension	380-0020-02200	Tax Forfeit	ST OF MN C278 L35	Existing Trails or Roadways - Improvements Needed	Preferred
Lumberjack Extension	380-0020-03700	Tax Forfeit	ST OF MN C278 L35	Existing Trails or Roadways - Improvements Needed	Preferred
Lumberjack Extension	400-0010-02070	Tax Forfeit	ST OF MN C278 L35	Existing Trails or Roadways - Improvements Needed	Preferred
Lumberjack Extension	400-0010-01930	Tax Forfeit	ST OF MN C278 L35	Proposed Route - New Construction Proposed for ATV Use	Preferred
Lumberjack Extension	400-0010-02020	Tax Forfeit	ST OF MN C278 L35	Proposed Route - New Construction Proposed for ATV Use	Preferred
Lumberjack Extension	400-0010-02070	Tax Forfeit	ST OF MN C278 L35	Proposed Route - New Construction Proposed for ATV Use	Preferred
Lumberjack Extension	400-0010-04010	Tax Forfeit	ST OF MN C278 L35	Proposed Route - New Construction Proposed for ATV Use	Alternate
Lumberjack Extension	400-0010-04110	Tax Forfeit	ST OF MN C278 L35	Proposed Route - New Construction Proposed for ATV Use	Alternate
Lumberjack Extension	400-0010-04190	Tax Forfeit	ST OF MN C278 L35	Proposed Route - New Construction Proposed for ATV Use	Alternate
Lumberjack Extension	400-0010-02420	Unknown	UNKNOWN	Existing Trails or Roadways - Improvements Needed	Preferred
Lumberjack Extension	400-0010-04020	Unknown	UNKNOWN	Existing Trails or Roadways - Improvements Needed	Preferred
Lumberjack Extension	400-0010-04310	Unknown	UNKNOWN	Existing Trails or Roadways - Improvements Needed	Preferred
Lumberjack Extension	400-0010-04450	Unknown	UNKNOWN	Existing Trails or Roadways - Improvements Needed	Preferred
Lumberjack Extension	400-0010-04020	Unknown	UNKNOWN	Proposed Route - New Construction Proposed for ATV Use	Alternate
Lumberjack Extension	400-0010-04310	Unknown	UNKNOWN	Proposed Route - New Construction Proposed for ATV Use	Alternate
Lumberjack Extension	400-0010-04366	Private	WEME RONALD E SR	Existing Trails or Roadways - Improvements Needed	Preferred
Lumberjack to Brookston	(blank)	Municipal	CITY OF CLOQUET	Existing Trails or Roadways - Improvements Needed	Alternate
Lumberjack to Brookston	(blank)	Municipal	CITY OF CLOQUET	Existing Trails or Roadways - Improvements Needed	Preferred
Lumberjack to Brookston	(blank)	Private	DNR TAX SPECIALIST	Existing Trails or Roadways - Improvements Needed	Alternate
Lumberjack to Brookston	(blank)	Private	DNR TAX SPECIALIST	Existing Trails or Roadways - Improvements Needed	Preferred
Lumberjack to Brookston	275-0025-00530	Private	HAGENAH SHAWN	Existing Trails or Roadways - Improvements Needed	Preferred
Lumberjack to Brookston	275-0025-00540	Private	JOHANSON JAMES J	Existing Trails or Roadways - Improvements Needed	Preferred
Lumberjack to Brookston	275-0013-00980	Private	OMAR DOUGLAS D	Existing Trails or Roadways - Improvements Needed	Preferred
Lumberjack to Brookston	275-0013-01020	Private	OMAR DOUGLAS D	Existing Trails or Roadways - Improvements Needed	Preferred
Lumberjack to Brookston	(blank)	Private	SANDERS, JOHN E & DANA K	Existing Trails or Roadways - Improvements Needed	Preferred
Lumberjack to Brookston	275-0010-01136	County Fee	ST LOUIS COUNTY	Existing Trails or Roadways - Improvements Needed	Preferred
Lumberjack to Brookston	275-0010-01350	County Fee	ST LOUIS COUNTY	Existing Trails or Roadways - Improvements Needed	Preferred
Lumberjack to Brookston	275-0010-01360	County Fee	ST LOUIS COUNTY	Existing Trails or Roadways - Improvements Needed	Preferred
Lumberjack to Brookston	275-0010-01370	County Fee	ST LOUIS COUNTY	Existing Trails or Roadways - Improvements Needed	Preferred
Lumberjack to Brookston	275-0010-01390	County Fee	ST LOUIS COUNTY	Existing Trails or Roadways - Improvements Needed	Alternate
Lumberjack to Brookston	275-0010-01390	County Fee	ST LOUIS COUNTY	Existing Trails or Roadways - Improvements Needed	Preferred
Lumberjack to Brookston	275-0010-01500	County Fee	ST LOUIS COUNTY	Existing Trails or Roadways - Improvements Needed	Preferred
Lumberjack to Brookston	275-0011-00010	County Fee	ST LOUIS COUNTY	Existing Trails or Roadways - Improvements Needed	Preferred
Lumberjack to Brookston	275-0012-00010	County Fee	ST LOUIS COUNTY	Existing Trails or Roadways - Improvements Needed	Preferred

Attachment A3: Tax Parcels

Trail Group	Parcel Number	Ownership Type	Owner Name	Trail Route Category	Preferred or Alternate
Lumberjack to Brookston	275-0013-00010	County Fee	ST LOUIS COUNTY	Existing Trails or Roadways - Improvements Needed	Preferred
Lumberjack to Brookston	275-0013-00050	County Fee	ST LOUIS COUNTY	Existing Trails or Roadways - Improvements Needed	Preferred
Lumberjack to Brookston	275-0013-01420	County Fee	ST LOUIS COUNTY	Existing Trails or Roadways - Improvements Needed	Preferred
Lumberjack to Brookston	275-0013-01065	State	ST OF MN	Existing Trails or Roadways - Improvements Needed	Preferred
Lumberjack to Brookston	275-0025-00560	State	ST OF MN	Existing Trails or Roadways - Improvements Needed	Preferred
Lumberjack to Brookston	275-0013-01120	State	STATE OF MINNESOTA	Existing Trails or Roadways - Improvements Needed	Alternate
Lumberjack to Brookston	275-0013-01120	State	STATE OF MINNESOTA	Existing Trails or Roadways - Improvements Needed	Preferred
Lumberjack to Brookston	275-0013-01160	State	STATE OF MINNESOTA	Existing Trails or Roadways - Improvements Needed	Alternate
Lumberjack to Brookston	275-0013-01160	State	STATE OF MINNESOTA	Existing Trails or Roadways - Improvements Needed	Preferred
Lumberjack to Brookston	275-0013-01200	State	STATE OF MINNESOTA	Existing Trails or Roadways - Improvements Needed	Preferred
Lumberjack to Brookston	275-0013-01240	State	STATE OF MINNESOTA	Existing Trails or Roadways - Improvements Needed	Preferred
Lumberjack to Brookston	275-0013-01280	State	STATE OF MINNESOTA	Existing Trails or Roadways - Improvements Needed	Preferred
Lumberjack to Brookston	275-0013-01290	State	STATE OF MINNESOTA	Existing Trails or Roadways - Improvements Needed	Preferred
Lumberjack to Brookston	535-0010-00065	State	STATE OF MINNESOTA	Existing Trails or Roadways - Improvements Needed	Alternate
Lumberjack to Brookston	535-0010-00065	State	STATE OF MINNESOTA	Existing Trails or Roadways - Improvements Needed	Preferred
Lumberjack to Brookston	535-0010-00070	State	STATE OF MINNESOTA	Existing Trails or Roadways - Improvements Needed	Alternate
Lumberjack to Brookston	535-0010-00070	State	STATE OF MINNESOTA	Existing Trails or Roadways - Improvements Needed	Preferred
Lumberjack to Brookston	275-0013-01140	Private	WITTE MELANIE M LIVING TRUST	Existing Trails or Roadways - Improvements Needed	Preferred
Road Route Connections	(blank)	N/A		Existing Trails or Roadways - Improvements Needed	Preferred
Road Route Connections	(blank)	Unknown		Existing Trails or Roadways - Improvements Needed	Preferred
Road Route Connections	(blank)	Private	ABRAHAMSON, STARR & RAHN E	Existing Trails or Roadways - Improvements Needed	Preferred
Road Route Connections	185-0240-00590	Private	ALLETE INC	Existing Trails or Roadways - Improvements Needed	Preferred
Road Route Connections	185-0240-00650	Private	ALLETE INC	Existing Trails or Roadways - Improvements Needed	Preferred
Road Route Connections	450-0010-02310	Private	ALLETE INC	Existing Trails or Roadways - Improvements Needed	Preferred
Road Route Connections	450-0010-02330	Private	ALLETE INC	Existing Trails or Roadways - Improvements Needed	Preferred
Road Route Connections	(blank)	Private	ANGELL, ADAM A & KAYLIE J	Existing Trails or Roadways - Improvements Needed	Preferred
Road Route Connections	(blank)	Private	BELLAND, MARK A	Existing Trails or Roadways - Improvements Needed	Preferred
Road Route Connections	450-0010-02284	Private	BENGTSON GRANTLAND	Existing Trails or Roadways - Improvements Needed	Preferred
Road Route Connections	(blank)	Private	BERGLUND, GERALD J & LINDA J	Existing Trails or Roadways - Improvements Needed	Preferred
Road Route Connections	450-0010-02254	Private	BJORKLUND FAMILY TRUST	Existing Trails or Roadways - Improvements Needed	Preferred
Road Route Connections	(blank)	Private	BRADY, JOHN M	Existing Trails or Roadways - Improvements Needed	Preferred
Road Route Connections	(blank)	Private	BURGRAFF, GEORGE & KAREN	Existing Trails or Roadways - Improvements Needed	Preferred
Road Route Connections	450-0010-03696	Private	CAREY BARBARA ANN	Existing Trails or Roadways - Improvements Needed	Preferred
Road Route Connections	(blank)	Private	CARLTON COUNTY	Existing Trails or Roadways - Improvements Needed	Alternate
Road Route Connections	(blank)	Private	CARLTON COUNTY	Existing Trails or Roadways - Improvements Needed	Preferred
Road Route Connections	450-0010-02095	Private	CARPENTER SARAH	Existing Trails or Roadways - Improvements Needed	Preferred
Road Route Connections	(blank)	Municipal	CITY OF CLOQUET	Existing Trails or Roadways - Improvements Needed	Preferred
Road Route Connections	(blank)	Municipal	CITY OF CLOQUET PARK	Existing Trails or Roadways - Improvements Needed	Preferred
Road Route Connections	185-0240-00534	Municipal	CITY OF PROCTOR	Existing Trails or Roadways - Improvements Needed	Preferred
Road Route Connections	185-0240-00535	Municipal	CITY OF PROCTOR	Existing Trails or Roadways - Improvements Needed	Preferred
Road Route Connections	185-0240-00551	Municipal	CITY OF PROCTOR	Existing Trails or Roadways - Improvements Needed	Preferred
Road Route Connections	185-0240-00614	Municipal	CITY OF PROCTOR	Existing Trails or Roadways - Improvements Needed	Preferred
Road Route Connections	185-0240-00656	Municipal	CITY OF PROCTOR	Existing Trails or Roadways - Improvements Needed	Preferred
Road Route Connections	185-0240-00657	Municipal	CITY OF PROCTOR	Existing Trails or Roadways - Improvements Needed	Preferred
Road Route Connections	185-0240-00670	Municipal	CITY OF PROCTOR	Existing Trails or Roadways - Improvements Needed	Preferred
Road Route Connections	185-0240-00672	Municipal	CITY OF PROCTOR	Existing Trails or Roadways - Improvements Needed	Preferred
Road Route Connections	185-0240-00680	Municipal	CITY OF PROCTOR	Existing Trails or Roadways - Improvements Needed	Preferred
Road Route Connections	(blank)	Private	DAY, BARD P	Existing Trails or Roadways - Improvements Needed	Preferred
Road Route Connections	(blank)	Private	DEHNKE, CHRIS A	Existing Trails or Roadways - Improvements Needed	Preferred
Road Route Connections	450-0010-02267	Private	DELZOTTO TROY	Existing Trails or Roadways - Improvements Needed	Preferred
Road Route Connections	(blank)	Private	DUSEK, THOMAS L	Existing Trails or Roadways - Improvements Needed	Preferred
Road Route Connections	450-0010-03070	Private	ELDE WILLIAM MATHEW	Existing Trails or Roadways - Improvements Needed	Preferred
Road Route Connections	450-0010-02250	Private	FLECK GREGORY L & JEANNE M	Existing Trails or Roadways - Improvements Needed	Preferred
Road Route Connections	450-0010-03065	Private	FRANKLIN CAROL	Existing Trails or Roadways - Improvements Needed	Preferred
Road Route Connections	450-0100-00020	Private	FREBERG ERIC	Existing Trails or Roadways - Improvements Needed	Preferred
Road Route Connections	535-0010-00186	Private	G N RY CO	Existing Trails or Roadways - Improvements Needed	Preferred
Road Route Connections	450-0010-02285	Private	GOLDSMITH BENJAMIN T	Existing Trails or Roadways - Improvements Needed	Preferred
Road Route Connections	450-0010-02270	Private	HEINZEN JAMES N	Existing Trails or Roadways - Improvements Needed	Preferred
Road Route Connections	(blank)	Private	HIGHWAY 61 LLC	Existing Trails or Roadways - Improvements Needed	Preferred
Road Route Connections	(blank)	Private	HILINSKI, CLINTON	Existing Trails or Roadways - Improvements Needed	Preferred
Road Route Connections	450-0010-03735	Private	HIPP THOMAS SR	Existing Trails or Roadways - Improvements Needed	Preferred
Road Route Connections	450-0010-02093	Private	HOTCHKIN TRENT DALE	Existing Trails or Roadways - Improvements Needed	Preferred
Road Route Connections	(blank)	Private	IND SCHOOL DIST 99	Existing Trails or Roadways - Improvements Needed	Preferred
Road Route Connections	(blank)	Private	INTERSTATE HWY 35	Existing Trails or Roadways - Improvements Needed	Preferred
Road Route Connections	(blank)	Private	JANCZAK, TAD M	Existing Trails or Roadways - Improvements Needed	Preferred
Road Route Connections	450-0010-02253	Private	JOHNSON JASE S	Existing Trails or Roadways - Improvements Needed	Preferred
Road Route Connections	275-0019-01140	Private	KEANE DIANNE M	Existing Trails or Roadways - Improvements Needed	Preferred
Road Route Connections	450-0010-02235	Private	KOTASKA RICHARD N ETAL	Existing Trails or Roadways - Improvements Needed	Preferred
Road Route Connections	(blank)	Private	KULAS, JOHN J & SANDRA D	Existing Trails or Roadways - Improvements Needed	Preferred
Road Route Connections	(blank)	Private	LAMMI, KRISTINE & JAVAN	Existing Trails or Roadways - Improvements Needed	Preferred
Road Route Connections	185-0240-00566	Private	LANDOWNER INC	Existing Trails or Roadways - Improvements Needed	Preferred
Road Route Connections	450-0010-02291	Private	LARSON JESSE	Existing Trails or Roadways - Improvements Needed	Preferred
Road Route Connections	450-0010-03720	Private	LEDOUX TRACY	Existing Trails or Roadways - Improvements Needed	Preferred
Road Route Connections	(blank)	Private	LEWIS, EUGENE H & WENDY E	Existing Trails or Roadways - Improvements Needed	Preferred
Road Route Connections	(blank)	Private	LIVING WORD DULUTH SUPERIOR	Existing Trails or Roadways - Improvements Needed	Preferred

Attachment A3: Tax Parcels

Trail Group	Parcel Number	Ownership Type	Owner Name	Trail Route Category	Preferred or Alternate
Road Route Connections	450-0010-02096	Private	LONNE SCOTT JOHN	Existing Trails or Roadways - Improvements Needed	Preferred
Road Route Connections	450-0010-03732	Private	LOVEN ROBERT & JEAN TRUST	Existing Trails or Roadways - Improvements Needed	Preferred
Road Route Connections	450-0010-03700	Private	MATTSON JULIA E	Existing Trails or Roadways - Improvements Needed	Preferred
Road Route Connections	450-0010-02240	Private	MCDONALD MAVIS A	Existing Trails or Roadways - Improvements Needed	Preferred
Road Route Connections	450-0010-02271	Private	MCPHEE THOMAS J	Existing Trails or Roadways - Improvements Needed	Preferred
Road Route Connections	450-0010-02266	Private	MEYER BEVERLY J	Existing Trails or Roadways - Improvements Needed	Preferred
Road Route Connections	450-0010-03130	Private	MIDWAY COM LU CONG CH	Existing Trails or Roadways - Improvements Needed	Preferred
Road Route Connections	(blank)	Private	MIDWAY RIVER PROPERTIES LLC	Existing Trails or Roadways - Improvements Needed	Preferred
Road Route Connections	450-0010-03692	Private	MINCHAK MARTHA J	Existing Trails or Roadways - Improvements Needed	Preferred
Road Route Connections	(blank)	Private	MINNESOTA POWER	Existing Trails or Roadways - Improvements Needed	Alternate
Road Route Connections	(blank)	Private	MINNESOTA POWER	Existing Trails or Roadways - Improvements Needed	Preferred
Road Route Connections	(blank)	Private	MYLLYMAA/HILINSKI REVOCABLE TRUST	Existing Trails or Roadways - Improvements Needed	Preferred
Road Route Connections	(blank)	Private	NELSON, GLORIA L	Existing Trails or Roadways - Improvements Needed	Preferred
Road Route Connections	450-0010-02288	Private	ONEIL MICHAEL PATRICK	Existing Trails or Roadways - Improvements Needed	Preferred
Road Route Connections	450-0010-03110	Private	PASS KIANA MARIE	Existing Trails or Roadways - Improvements Needed	Preferred
Road Route Connections	(blank)	Private	PETES ZA, LLC	Existing Trails or Roadways - Improvements Needed	Preferred
Road Route Connections	(blank)	Private	POLO, JERI L	Existing Trails or Roadways - Improvements Needed	Preferred
Road Route Connections	(blank)	Private	POLO, MARCO D & KARINA M	Existing Trails or Roadways - Improvements Needed	Alternate
Road Route Connections	185-0240-00565	Private	PROCTOR MOTEL ASSN LLP	Existing Trails or Roadways - Improvements Needed	Preferred
Road Route Connections	(blank)	Private	RADOSEVICH, PETE & TARA	Existing Trails or Roadways - Improvements Needed	Preferred
Road Route Connections	185-0240-00660	Private	SCANLON AMY M	Existing Trails or Roadways - Improvements Needed	Preferred
Road Route Connections	450-0010-02237	Private	SEMERAU AARON G	Existing Trails or Roadways - Improvements Needed	Preferred
Road Route Connections	450-0010-02060	Private	SHEETZ KYDEE K	Existing Trails or Roadways - Improvements Needed	Preferred
Road Route Connections	010-2741-01030	Private	SILVERNESS KATHY	Existing Trails or Roadways - Improvements Needed	Preferred
Road Route Connections	(blank)	Private	SMITH COMPANY PROPERTIES LLC	Existing Trails or Roadways - Improvements Needed	Preferred
Road Route Connections	450-0010-04561	County Fee	ST LOUIS COUNTY	Existing Trails or Roadways - Improvements Needed	Preferred
Road Route Connections	450-0010-04573	County Fee	ST LOUIS COUNTY	Existing Trails or Roadways - Improvements Needed	Preferred
Road Route Connections	475-0010-01650	County Fee	ST LOUIS COUNTY	Existing Trails or Roadways - Improvements Needed	Preferred
Road Route Connections	(blank)	Private	ST MATTHEWS LUTHERAN CHURCH	Existing Trails or Roadways - Improvements Needed	Preferred
Road Route Connections	275-0019-01210	State	ST OF MN	Existing Trails or Roadways - Improvements Needed	Preferred
Road Route Connections	185-0240-00640	Tax Forfeit	ST OF MN C278 L35	Existing Trails or Roadways - Improvements Needed	Preferred
Road Route Connections	475-0010-01670	Tax Forfeit	ST OF MN C278 L35	Existing Trails or Roadways - Improvements Needed	Preferred
Road Route Connections	475-0010-01830	Tax Forfeit	ST OF MN C278 L35	Existing Trails or Roadways - Improvements Needed	Preferred
Road Route Connections	673-0010-04080	Tax Forfeit	ST OF MN C278 L35	Existing Trails or Roadways - Improvements Needed	Preferred
Road Route Connections	673-0010-04250	Tax Forfeit	ST OF MN C278 L35	Existing Trails or Roadways - Improvements Needed	Preferred
Road Route Connections	673-0010-04420	Tax Forfeit	ST OF MN C278 L35	Existing Trails or Roadways - Improvements Needed	Preferred
Road Route Connections	673-0010-04890	Tax Forfeit	ST OF MN C278 L35	Existing Trails or Roadways - Improvements Needed	Preferred
Road Route Connections	673-0010-05050	Tax Forfeit	ST OF MN C278 L35	Existing Trails or Roadways - Improvements Needed	Preferred
Road Route Connections	673-0010-05210	Tax Forfeit	ST OF MN C278 L35	Existing Trails or Roadways - Improvements Needed	Preferred
Road Route Connections	(blank)	Private	STAFNE, AUSTIN N & GWENDOLYN V	Existing Trails or Roadways - Improvements Needed	Preferred
Road Route Connections	275-0019-01100	State	STATE OF MINNESOTA	Existing Trails or Roadways - Improvements Needed	Preferred
Road Route Connections	450-0010-03422	State	STATE OF MINNESOTA	Existing Trails or Roadways - Improvements Needed	Preferred
Road Route Connections	535-0010-00062	State	STATE OF MINNESOTA	Existing Trails or Roadways - Improvements Needed	Preferred
Road Route Connections	535-0010-00070	State	STATE OF MINNESOTA	Existing Trails or Roadways - Improvements Needed	Preferred
Road Route Connections	535-0010-00250	State	STATE OF MINNESOTA	Existing Trails or Roadways - Improvements Needed	Preferred
Road Route Connections	(blank)	State	STATE OF MINNESOTA	Existing Trails or Roadways - Improvements Needed	Preferred
Road Route Connections	(blank)	Private	STOSKOPF, CHADRICK A	Existing Trails or Roadways - Improvements Needed	Preferred
Road Route Connections	(blank)	Private	SUNDQUIST, TREVOR A	Existing Trails or Roadways - Improvements Needed	Preferred
Road Route Connections	450-0010-03100	Private	SUPERIOR REFINING COMPANY LLC	Existing Trails or Roadways - Improvements Needed	Preferred
Road Route Connections	450-0010-03120	Private	SUPERIOR REFINING COMPANY LLC	Existing Trails or Roadways - Improvements Needed	Preferred
Road Route Connections	(blank)	Private	SWANCO, LLC	Existing Trails or Roadways - Improvements Needed	Alternate
Road Route Connections	(blank)	Tax Forfeit	TAX FORFEIT - COUNTY ADMINISTERED	Existing Trails or Roadways - Improvements Needed	Preferred
Road Route Connections	010-2745-00060	Private	THOMPSON BRETT M	Existing Trails or Roadways - Improvements Needed	Preferred
Road Route Connections	275-0019-01155	Private	TOMSCHE JAMES J	Existing Trails or Roadways - Improvements Needed	Preferred
Road Route Connections	(blank)	Private	TOWNSHIP OF THOMSON	Existing Trails or Roadways - Improvements Needed	Preferred
Road Route Connections	535-0010-00235	Tribal	USA IN TRUST FOR FOND DU LAC BAND	Existing Trails or Roadways - Improvements Needed	Preferred
Road Route Connections	450-0010-03060	Private	VEGAR PROPERTIES LLC	Existing Trails or Roadways - Improvements Needed	Preferred
Road Route Connections	(blank)	Private	VICHOREK, JESTINA & TAYLOR	Existing Trails or Roadways - Improvements Needed	Preferred
Road Route Connections	(blank)	Private	WALLER, SHERRI L	Existing Trails or Roadways - Improvements Needed	Preferred
Road Route Connections	(blank)	Private	WIDDES HOLDINGS LLC	Existing Trails or Roadways - Improvements Needed	Preferred
Road Route Connections	185-9090-00010	Private	WISCONSIN CENTRAL LTD	Existing Trails or Roadways - Improvements Needed	Preferred
Road Route Connections	(blank)	Private	WITTE, ALEXANDER M	Existing Trails or Roadways - Improvements Needed	Preferred
Road Route Connections	(blank)	Private	WOODFIRE CANDLE COMPANY LLC	Existing Trails or Roadways - Improvements Needed	Preferred
Road Route Connections	450-0010-03695	Private	WUEBKERS DAVID MICHAEL	Existing Trails or Roadways - Improvements Needed	Preferred
Road Route Connections	450-0010-02094	Private	ZIELLS JASON	Existing Trails or Roadways - Improvements Needed	Preferred
Taft to Canyon	365-0010-05230	Private	ALLETE INC	Existing Trails or Roadways - Improvements Needed	Alternate
Taft to Canyon	365-0010-05240	Private	ALLETE INC	Existing Trails or Roadways - Improvements Needed	Preferred
Taft to Canyon	380-0020-02350	Private	ALLETE INC	Existing Trails or Roadways - Improvements Needed	Preferred
Taft to Canyon	380-0020-04940	Private	ALLETE INC	Existing Trails or Roadways - Improvements Needed	Preferred
Taft to Canyon	380-0020-05860	Private	ALLETE INC	Existing Trails or Roadways - Improvements Needed	Preferred
Taft to Canyon	380-0020-05890	Private	MARTIN ALBERT J ETUX	Existing Trails or Roadways - Improvements Needed	Preferred
Taft to Canyon	365-0010-05210	Private	MAXIM MICHAEL P	Existing Trails or Roadways - Improvements Needed	Preferred
Taft to Canyon	365-0010-03730	Private	MCSHANE MARK C & LAURIE B REVOC	Existing Trails or Roadways - Improvements Needed	Preferred
Taft to Canyon	365-0010-05242	Private	MCSHANE MARK C & LAURIE B REVOC	Existing Trails or Roadways - Improvements Needed	Preferred
Taft to Canyon	365-0191-00030	Private	MCSHANE MARK C & LAURIE B REVOC	Existing Trails or Roadways - Improvements Needed	Preferred

Attachment A3: Tax Parcels

Trail Group	Parcel Number	Ownership Type	Owner Name	Trail Route Category	Preferred or Alternate
Taft to Canyon	380-0020-04470	Private	MIBIJO INC	Existing Trails or Roadways - Improvements Needed	Preferred
Taft to Canyon	380-0147-00010	Private	SHELTON MICHAEL J	Existing Trails or Roadways - Improvements Needed	Alternate
Taft to Canyon	380-0020-00750	County Fee	ST LOUIS COUNTY	Existing Trails or Roadways - Improvements Needed	Preferred
Taft to Canyon	380-0020-00760	County Fee	ST LOUIS COUNTY	Existing Trails or Roadways - Improvements Needed	Preferred
Taft to Canyon	380-0020-00970	County Fee	ST LOUIS COUNTY	Existing Trails or Roadways - Improvements Needed	Preferred
Taft to Canyon	380-0020-01160	County Fee	ST LOUIS COUNTY	Existing Trails or Roadways - Improvements Needed	Preferred
Taft to Canyon	380-0020-01210	County Fee	ST LOUIS COUNTY	Existing Trails or Roadways - Improvements Needed	Preferred
Taft to Canyon	380-0020-01806	County Fee	ST LOUIS COUNTY	Existing Trails or Roadways - Improvements Needed	Preferred
Taft to Canyon	380-0020-02415	County Fee	ST LOUIS COUNTY	Existing Trails or Roadways - Improvements Needed	Preferred
Taft to Canyon	380-0020-03695	County Fee	ST LOUIS COUNTY	Existing Trails or Roadways - Improvements Needed	Preferred
Taft to Canyon	380-0020-03895	County Fee	ST LOUIS COUNTY	Existing Trails or Roadways - Improvements Needed	Preferred
Taft to Canyon	475-0010-01810	County Fee	ST LOUIS COUNTY	Existing Trails or Roadways - Improvements Needed	Preferred
Taft to Canyon	673-0010-05280	County Fee	ST LOUIS COUNTY	Existing Trails or Roadways - Improvements Needed	Alternate
Taft to Canyon	673-0010-05280	County Fee	ST LOUIS COUNTY	Existing Trails or Roadways - Improvements Needed	Preferred
Taft to Canyon	365-0010-03320	State	ST OF MN	Existing Trails or Roadways - Improvements Needed	Preferred
Taft to Canyon	365-0010-03390	State	ST OF MN	Existing Trails or Roadways - Improvements Needed	Preferred
Taft to Canyon	365-0010-03410	State	ST OF MN	Existing Trails or Roadways - Improvements Needed	Preferred
Taft to Canyon	380-0020-03410	State	ST OF MN	Existing Trails or Roadways - Improvements Needed	Preferred
Taft to Canyon	380-0020-03460	State	ST OF MN	Existing Trails or Roadways - Improvements Needed	Preferred
Taft to Canyon	380-0020-03480	State	ST OF MN	Existing Trails or Roadways - Improvements Needed	Preferred
Taft to Canyon	380-0020-03500	State	ST OF MN	Existing Trails or Roadways - Improvements Needed	Preferred
Taft to Canyon	380-0020-03560	State	ST OF MN	Existing Trails or Roadways - Improvements Needed	Alternate
Taft to Canyon	380-0020-03560	State	ST OF MN	Existing Trails or Roadways - Improvements Needed	Preferred
Taft to Canyon	380-0020-03610	State	ST OF MN	Existing Trails or Roadways - Improvements Needed	Preferred
Taft to Canyon	380-0020-03620	State	ST OF MN	Existing Trails or Roadways - Improvements Needed	Preferred
Taft to Canyon	380-0020-04080	State	ST OF MN	Existing Trails or Roadways - Improvements Needed	Preferred
Taft to Canyon	380-0020-04260	State	ST OF MN	Existing Trails or Roadways - Improvements Needed	Preferred
Taft to Canyon	380-0020-04280	State	ST OF MN	Existing Trails or Roadways - Improvements Needed	Preferred
Taft to Canyon	380-0020-04320	State	ST OF MN	Existing Trails or Roadways - Improvements Needed	Preferred
Taft to Canyon	380-0020-04840	State	ST OF MN	Existing Trails or Roadways - Improvements Needed	Alternate
Taft to Canyon	380-0020-04840	State	ST OF MN	Existing Trails or Roadways - Improvements Needed	Preferred
Taft to Canyon	380-0020-04860	State	ST OF MN	Existing Trails or Roadways - Improvements Needed	Alternate
Taft to Canyon	380-0020-04860	State	ST OF MN	Existing Trails or Roadways - Improvements Needed	Preferred
Taft to Canyon	380-0020-04920	State	ST OF MN	Existing Trails or Roadways - Improvements Needed	Alternate
Taft to Canyon	380-0020-04920	State	ST OF MN	Existing Trails or Roadways - Improvements Needed	Preferred
Taft to Canyon	380-0020-05160	State	ST OF MN	Existing Trails or Roadways - Improvements Needed	Alternate
Taft to Canyon	380-0020-05160	State	ST OF MN	Existing Trails or Roadways - Improvements Needed	Preferred
Taft to Canyon	380-0020-05360	State	ST OF MN	Existing Trails or Roadways - Improvements Needed	Preferred
Taft to Canyon	380-0020-05850	State	ST OF MN	Existing Trails or Roadways - Improvements Needed	Preferred
Taft to Canyon	475-0010-03910	State	ST OF MN	Existing Trails or Roadways - Improvements Needed	Preferred
Taft to Canyon	475-0010-04160	State	ST OF MN	Existing Trails or Roadways - Improvements Needed	Preferred
Taft to Canyon	365-0010-03400	Tax Forfeit	ST OF MN C278 L35	Existing Trails or Roadways - Improvements Needed	Alternate
Taft to Canyon	365-0010-03440	Tax Forfeit	ST OF MN C278 L35	Existing Trails or Roadways - Improvements Needed	Alternate
Taft to Canyon	365-0010-03440	Tax Forfeit	ST OF MN C278 L35	Existing Trails or Roadways - Improvements Needed	Preferred
Taft to Canyon	365-0010-05250	Tax Forfeit	ST OF MN C278 L35	Existing Trails or Roadways - Improvements Needed	Alternate
Taft to Canyon	365-0010-05370	Tax Forfeit	ST OF MN C278 L35	Existing Trails or Roadways - Improvements Needed	Alternate
Taft to Canyon	365-0010-05370	Tax Forfeit	ST OF MN C278 L35	Existing Trails or Roadways - Improvements Needed	Preferred
Taft to Canyon	380-0020-00340	Tax Forfeit	ST OF MN C278 L35	Existing Trails or Roadways - Improvements Needed	Alternate
Taft to Canyon	380-0020-00340	Tax Forfeit	ST OF MN C278 L35	Existing Trails or Roadways - Improvements Needed	Preferred
Taft to Canyon	380-0020-00660	Tax Forfeit	ST OF MN C278 L35	Existing Trails or Roadways - Improvements Needed	Alternate
Taft to Canyon	380-0020-00660	Tax Forfeit	ST OF MN C278 L35	Existing Trails or Roadways - Improvements Needed	Preferred
Taft to Canyon	380-0020-00820	Tax Forfeit	ST OF MN C278 L35	Existing Trails or Roadways - Improvements Needed	Preferred
Taft to Canyon	380-0020-00980	Tax Forfeit	ST OF MN C278 L35	Existing Trails or Roadways - Improvements Needed	Preferred
Taft to Canyon	380-0020-01150	Tax Forfeit	ST OF MN C278 L35	Existing Trails or Roadways - Improvements Needed	Preferred
Taft to Canyon	380-0020-01200	Tax Forfeit	ST OF MN C278 L35	Existing Trails or Roadways - Improvements Needed	Preferred
Taft to Canyon	380-0020-01310	Tax Forfeit	ST OF MN C278 L35	Existing Trails or Roadways - Improvements Needed	Preferred
Taft to Canyon	380-0020-01460	Tax Forfeit	ST OF MN C278 L35	Existing Trails or Roadways - Improvements Needed	Alternate
Taft to Canyon	380-0020-01460	Tax Forfeit	ST OF MN C278 L35	Existing Trails or Roadways - Improvements Needed	Preferred
Taft to Canyon	380-0020-01620	Tax Forfeit	ST OF MN C278 L35	Existing Trails or Roadways - Improvements Needed	Preferred
Taft to Canyon	380-0020-01720	Tax Forfeit	ST OF MN C278 L35	Existing Trails or Roadways - Improvements Needed	Preferred
Taft to Canyon	380-0020-02200	Tax Forfeit	ST OF MN C278 L35	Existing Trails or Roadways - Improvements Needed	Preferred
Taft to Canyon	380-0020-02420	Tax Forfeit	ST OF MN C278 L35	Existing Trails or Roadways - Improvements Needed	Preferred
Taft to Canyon	380-0020-02740	Tax Forfeit	ST OF MN C278 L35	Existing Trails or Roadways - Improvements Needed	Preferred
Taft to Canyon	380-0020-02900	Tax Forfeit	ST OF MN C278 L35	Existing Trails or Roadways - Improvements Needed	Preferred
Taft to Canyon	380-0020-03060	Tax Forfeit	ST OF MN C278 L35	Existing Trails or Roadways - Improvements Needed	Alternate
Taft to Canyon	380-0020-03060	Tax Forfeit	ST OF MN C278 L35	Existing Trails or Roadways - Improvements Needed	Preferred
Taft to Canyon	380-0020-03220	Tax Forfeit	ST OF MN C278 L35	Existing Trails or Roadways - Improvements Needed	Alternate
Taft to Canyon	380-0020-03220	Tax Forfeit	ST OF MN C278 L35	Existing Trails or Roadways - Improvements Needed	Preferred
Taft to Canyon	380-0020-03380	Tax Forfeit	ST OF MN C278 L35	Existing Trails or Roadways - Improvements Needed	Preferred
Taft to Canyon	380-0020-03700	Tax Forfeit	ST OF MN C278 L35	Existing Trails or Roadways - Improvements Needed	Preferred
Taft to Canyon	380-0020-04270	Tax Forfeit	ST OF MN C278 L35	Existing Trails or Roadways - Improvements Needed	Preferred
Taft to Canyon	380-0020-04850	Tax Forfeit	ST OF MN C278 L35	Existing Trails or Roadways - Improvements Needed	Alternate
Taft to Canyon	380-0020-05000	Tax Forfeit	ST OF MN C278 L35	Existing Trails or Roadways - Improvements Needed	Alternate
Taft to Canyon	380-0020-05000	Tax Forfeit	ST OF MN C278 L35	Existing Trails or Roadways - Improvements Needed	Preferred
Taft to Canyon	475-0010-01670	Tax Forfeit	ST OF MN C278 L35	Existing Trails or Roadways - Improvements Needed	Preferred

Attachment A3: Tax Parcels

Trail Group	Parcel Number	Ownership Type	Owner Name	Trail Route Category	Preferred or Alternate
Taft to Canyon	475-0010-01830	Tax Forfeit	ST OF MN C278 L35	Existing Trails or Roadways - Improvements Needed	Alternate
Taft to Canyon	475-0010-01830	Tax Forfeit	ST OF MN C278 L35	Existing Trails or Roadways - Improvements Needed	Preferred
Taft to Canyon	475-0010-01970	Tax Forfeit	ST OF MN C278 L35	Existing Trails or Roadways - Improvements Needed	Alternate
Taft to Canyon	475-0010-01970	Tax Forfeit	ST OF MN C278 L35	Existing Trails or Roadways - Improvements Needed	Preferred
Taft to Canyon	475-0010-03720	Tax Forfeit	ST OF MN C278 L35	Existing Trails or Roadways - Improvements Needed	Preferred
Taft to Canyon	475-0010-03770	Tax Forfeit	ST OF MN C278 L35	Existing Trails or Roadways - Improvements Needed	Preferred
Taft to Canyon	475-0010-03930	Tax Forfeit	ST OF MN C278 L35	Existing Trails or Roadways - Improvements Needed	Preferred
Taft to Canyon	475-0010-04130	Tax Forfeit	ST OF MN C278 L35	Existing Trails or Roadways - Improvements Needed	Preferred
Taft to Canyon	673-0010-04080	Tax Forfeit	ST OF MN C278 L35	Existing Trails or Roadways - Improvements Needed	Preferred
Taft to Canyon	673-0010-04250	Tax Forfeit	ST OF MN C278 L35	Existing Trails or Roadways - Improvements Needed	Preferred
Taft to Canyon	673-0010-04730	Tax Forfeit	ST OF MN C278 L35	Existing Trails or Roadways - Improvements Needed	Alternate
Taft to Canyon	673-0010-04730	Tax Forfeit	ST OF MN C278 L35	Existing Trails or Roadways - Improvements Needed	Preferred
Taft to Canyon	673-0010-04890	Tax Forfeit	ST OF MN C278 L35	Existing Trails or Roadways - Improvements Needed	Alternate
Taft to Canyon	673-0010-04890	Tax Forfeit	ST OF MN C278 L35	Existing Trails or Roadways - Improvements Needed	Preferred
Taft to Canyon	673-0010-04910	Tax Forfeit	ST OF MN C278 L35	Existing Trails or Roadways - Improvements Needed	Alternate
Taft to Canyon	673-0010-04970	Tax Forfeit	ST OF MN C278 L35	Existing Trails or Roadways - Improvements Needed	Alternate
Taft to Canyon	673-0010-04970	Tax Forfeit	ST OF MN C278 L35	Existing Trails or Roadways - Improvements Needed	Preferred
Taft to Canyon	673-0010-04980	Tax Forfeit	ST OF MN C278 L35	Existing Trails or Roadways - Improvements Needed	Alternate
Taft to Canyon	673-0010-04980	Tax Forfeit	ST OF MN C278 L35	Existing Trails or Roadways - Improvements Needed	Preferred
Taft to Canyon	673-0010-05020	Tax Forfeit	ST OF MN C278 L35	Existing Trails or Roadways - Improvements Needed	Alternate
Taft to Canyon	673-0010-05050	Tax Forfeit	ST OF MN C278 L35	Existing Trails or Roadways - Improvements Needed	Preferred
Taft to Canyon	673-0010-05210	Tax Forfeit	ST OF MN C278 L35	Existing Trails or Roadways - Improvements Needed	Alternate
Taft to Canyon	673-0010-05210	Tax Forfeit	ST OF MN C278 L35	Existing Trails or Roadways - Improvements Needed	Preferred
Taft to Canyon	380-0020-00660	Tax Forfeit	ST OF MN C278 L35	Proposed Route - New Construction Proposed for ATV Use	Alternate
Taft to Canyon	380-0020-02740	Tax Forfeit	ST OF MN C278 L35	Proposed Route - New Construction Proposed for ATV Use	Preferred
Taft to Canyon	380-0020-05000	Tax Forfeit	ST OF MN C278 L35	Proposed Route - New Construction Proposed for ATV Use	Preferred
Taft to Canyon	475-0010-01830	Tax Forfeit	ST OF MN C278 L35	Proposed Route - New Construction Proposed for ATV Use	Alternate
Taft to Canyon	475-0010-01970	Tax Forfeit	ST OF MN C278 L35	Proposed Route - New Construction Proposed for ATV Use	Alternate
Taft to Canyon	673-0010-04980	Tax Forfeit	ST OF MN C278 L35	Proposed Route - New Construction Proposed for ATV Use	Alternate
Taft to Canyon	380-0020-04850	Tax Forfeit	ST OF MN C278 L36	Existing Trails or Roadways - Improvements Needed	Preferred
Taft to Canyon	380-0020-02580	State	STATE OF MINNESOTA	Existing Trails or Roadways - Improvements Needed	Preferred
Taft to Canyon	380-0020-06020	State	STATE OF MINNESOTA	Existing Trails or Roadways - Improvements Needed	Preferred
Taft to Canyon	380-0020-00702	Private	SUNNARBORG SHAWN K	Existing Trails or Roadways - Improvements Needed	Preferred
Taft to Canyon	475-0010-02130	Municipal	TOWN OF NEW INDEPENDENCE	Existing Trails or Roadways - Improvements Needed	Preferred
Taft to Canyon	380-0020-06015	Unknown	UNKNOWN	Existing Trails or Roadways - Improvements Needed	Preferred
Taft to Canyon	475-0010-01860	Private	WHEALE MICHELLE L	Existing Trails or Roadways - Improvements Needed	Preferred
Taft to Canyon	380-0020-04475	Private	ZOMERFELT JUDY A	Existing Trails or Roadways - Improvements Needed	Preferred
West Lavaque Trail System	280-0011-00170	Private	ALLETE INC	Existing Trails or Roadways - Improvements Needed	Preferred
West Lavaque Trail System	280-0011-00290	Private	ALLETE INC	Existing Trails or Roadways - Improvements Needed	Preferred
West Lavaque Trail System	365-0010-04940	Private	ALLETE INC	Existing Trails or Roadways - Improvements Needed	Alternate
West Lavaque Trail System	365-0010-05170	Private	ALLETE INC	Existing Trails or Roadways - Improvements Needed	Alternate
West Lavaque Trail System	365-0010-05004	Private	FREITAG JANICE D	Existing Trails or Roadways - Improvements Needed	Alternate
West Lavaque Trail System	365-0010-06033	Private	KANESKI PAUL D	Existing Trails or Roadways - Improvements Needed	Alternate
West Lavaque Trail System	365-0010-06033	Private	KANESKI PAUL D	Existing Trails or Roadways - Improvements Needed	Preferred
West Lavaque Trail System	280-0013-00330	Private	KOLODGE LIVING TRUST	Existing Trails or Roadways - Improvements Needed	Preferred
West Lavaque Trail System	365-0010-06040	Private	LTI HOLDINGS LLC	Existing Trails or Roadways - Improvements Needed	Alternate
West Lavaque Trail System	365-0010-06040	Private	LTI HOLDINGS LLC	Existing Trails or Roadways - Improvements Needed	Preferred
West Lavaque Trail System	365-0010-06073	Private	LTI HOLDINGS LLC	Existing Trails or Roadways - Improvements Needed	Alternate
West Lavaque Trail System	365-0010-05870	Private	NEUSTEL SCOTT	Existing Trails or Roadways - Improvements Needed	Alternate
West Lavaque Trail System	280-0013-00740	Private	PELICAN LLC	Existing Trails or Roadways - Improvements Needed	Preferred
West Lavaque Trail System	280-0011-00020	Tax Forfeit	ST OF MN C278 L35	Existing Trails or Roadways - Improvements Needed	Preferred
West Lavaque Trail System	280-0011-00730	Tax Forfeit	ST OF MN C278 L35	Existing Trails or Roadways - Improvements Needed	Preferred
West Lavaque Trail System	280-0011-00740	Tax Forfeit	ST OF MN C278 L35	Existing Trails or Roadways - Improvements Needed	Preferred
West Lavaque Trail System	280-0011-00770	Tax Forfeit	ST OF MN C278 L35	Existing Trails or Roadways - Improvements Needed	Preferred
West Lavaque Trail System	280-0011-00780	Tax Forfeit	ST OF MN C278 L35	Existing Trails or Roadways - Improvements Needed	Preferred
West Lavaque Trail System	280-0011-00910	Tax Forfeit	ST OF MN C278 L35	Existing Trails or Roadways - Improvements Needed	Preferred
West Lavaque Trail System	280-0011-00940	Tax Forfeit	ST OF MN C278 L35	Existing Trails or Roadways - Improvements Needed	Preferred
West Lavaque Trail System	280-0013-00170	Tax Forfeit	ST OF MN C278 L35	Existing Trails or Roadways - Improvements Needed	Preferred
West Lavaque Trail System	280-0013-00230	Tax Forfeit	ST OF MN C278 L35	Existing Trails or Roadways - Improvements Needed	Preferred
West Lavaque Trail System	280-0013-00240	Tax Forfeit	ST OF MN C278 L35	Existing Trails or Roadways - Improvements Needed	Preferred
West Lavaque Trail System	280-0013-00250	Tax Forfeit	ST OF MN C278 L35	Existing Trails or Roadways - Improvements Needed	Preferred
West Lavaque Trail System	280-0013-00310	Tax Forfeit	ST OF MN C278 L35	Existing Trails or Roadways - Improvements Needed	Preferred
West Lavaque Trail System	280-0013-00340	Tax Forfeit	ST OF MN C278 L35	Existing Trails or Roadways - Improvements Needed	Preferred
West Lavaque Trail System	365-0010-05890	Tax Forfeit	ST OF MN C278 L35	Existing Trails or Roadways - Improvements Needed	Alternate
West Lavaque Trail System	365-0010-05890	Tax Forfeit	ST OF MN C278 L35	Existing Trails or Roadways - Improvements Needed	Preferred
West Lavaque Trail System	365-0010-06090	Tax Forfeit	ST OF MN C278 L35	Existing Trails or Roadways - Improvements Needed	Alternate
West Lavaque Trail System	365-0010-06090	Tax Forfeit	ST OF MN C278 L35	Existing Trails or Roadways - Improvements Needed	Preferred
West Lavaque Trail System	365-0010-06031	Municipal	TOWN OF FREDENBERG	Existing Trails or Roadways - Improvements Needed	Preferred

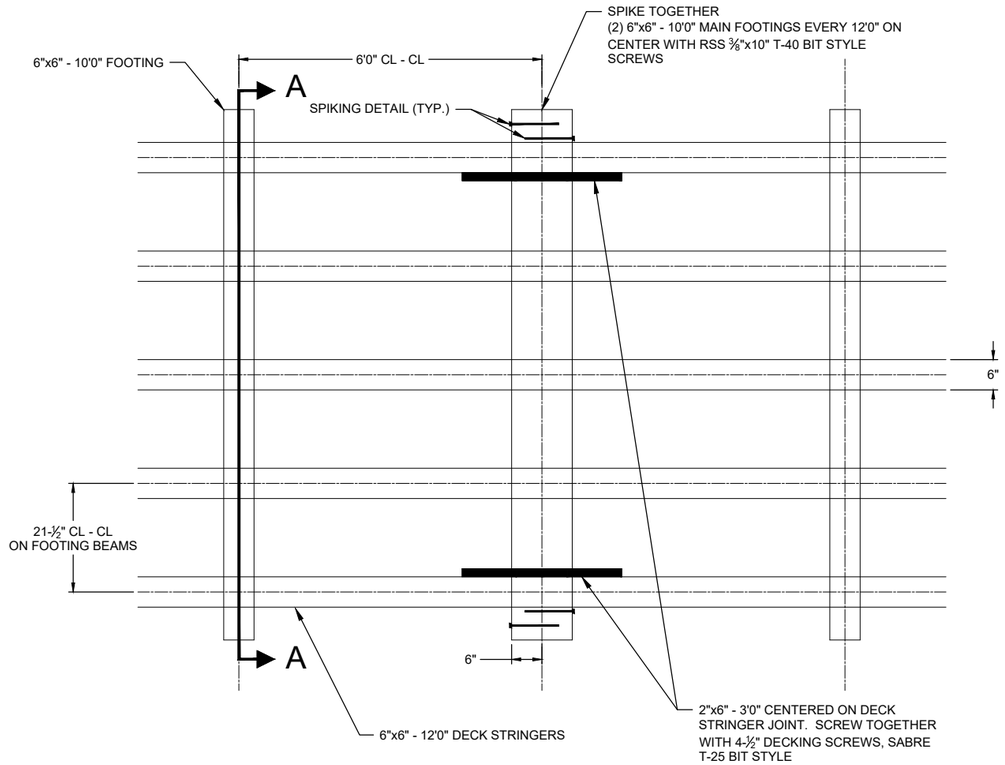

NOTE (APPLIES TO 8' AND 16' SECTIONS):

1. ALL LUMBER SHALL BE PRESSURE PRESERVATION TREATED WITH A NON-ARSENIC PRESERVATIVE, ACZA, ACQ, COPPER NAPHTHENATE OR EQUAL, WATER-BORNE PRESERVATIVE AND IN ACCORDANCE WITH THE FOLLOWING:
   a. KILN DRY ALL LUMBER TO A MOISTURE CONTENT OF 19 PERCENT OR LESS PRIOR TO PRESERVATIVE TREATMENT. RE-DRY LUMBER TREATED WITH WATERBORNE PRESERVATIVE.
   b. PROTECT ALL LUMBER FROM MOISTURE CONTENT INCREASE AFTER COMPLETION OF PRESERVATIVE TREATMENT BY COVERING OR OTHER APPROVED METHOD UNTIL INCORPORATED INTO THE WORK.
   c. USE SAME PRESERVATIVE TREATMENT FOR BOLT HOLES, SAW CUTS, ETC., AND FOR ANY ADDITIONAL DRESSING DEEMED NECESSARY BY ENGINEER.
   d. CARE FOR ALL TREATED LUMBER IN ACCORDANCE WITH THE APPLICABLE PROVISIONS OF AWPA "STANDARD FOR THE CARE OF PRESERVATIVE TREATED WOOD PRODUCTS."

ALL PUNCHEON MATERIALS HAVE BEEN PURCHASED BY OWNER AND ARE STORED AT
8171 ORR BUYCK RD.
BUYCK, MN 55771

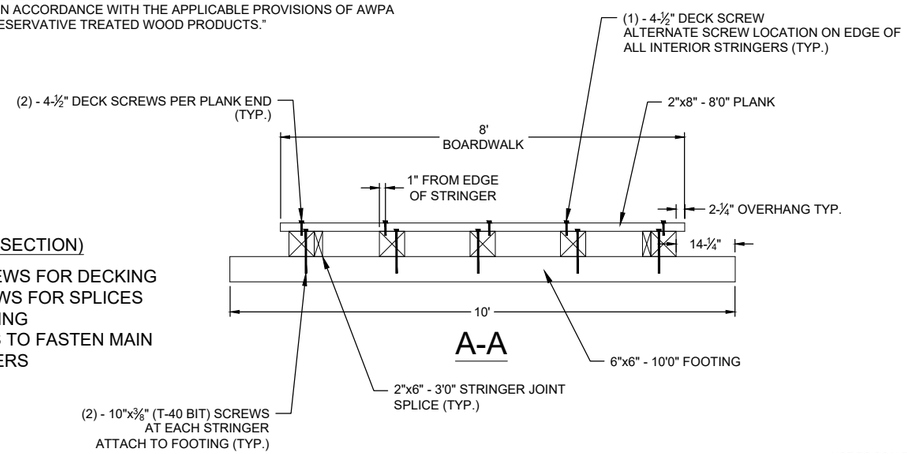

FASTENER SCHEDULE (PER 12' SECTION)

126 - 4 1/2" (T-25 BIT) DECK SCREWS FOR DECKING
20 - 4 1/2" (T-25 BIT) DECK SCREWS FOR SPLICES
4 - 10" X 3/8" (T-40 BIT) FOR SPIKING
30 - 10" X 3/8" (T-40 BIT) SCREWS TO FASTEN MAIN FOOTING TO DECK STRINGERS

NOT TO SCALE

8' BOARDWALK DETAIL

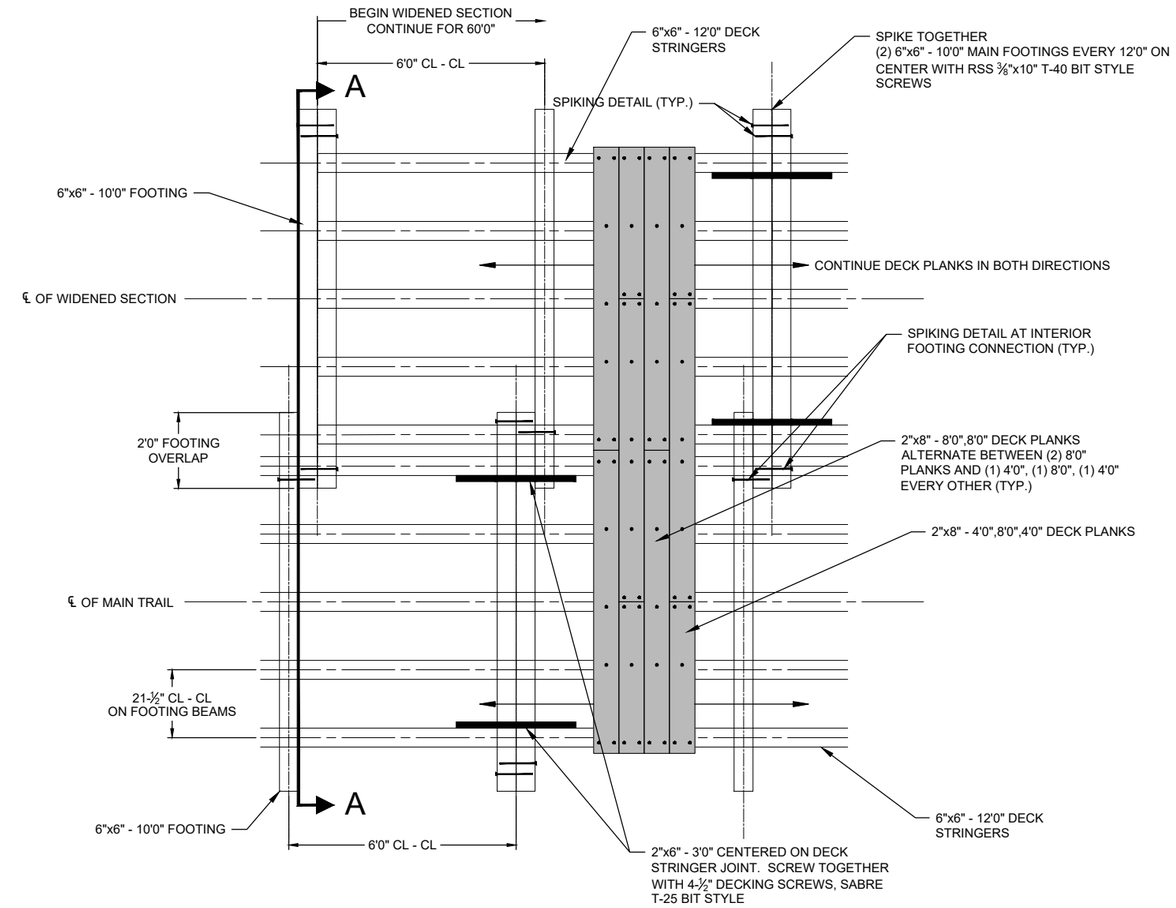

NOTE (APPLIES TO 8' AND 16' SECTIONS):

1. ALL LUMBER MATERIALS SUPPLIED BY CONTRACTOR.
2. CONTRACTOR TO PROVIDE ALL FASTENERS, LABOR AND EQUIPMENT TO TRANSPORT MATERIAL TO THE CONSTRUCTION SITE.
3. BOARDWALK TO BE CONSTRUCTED BY ATV CLUB.

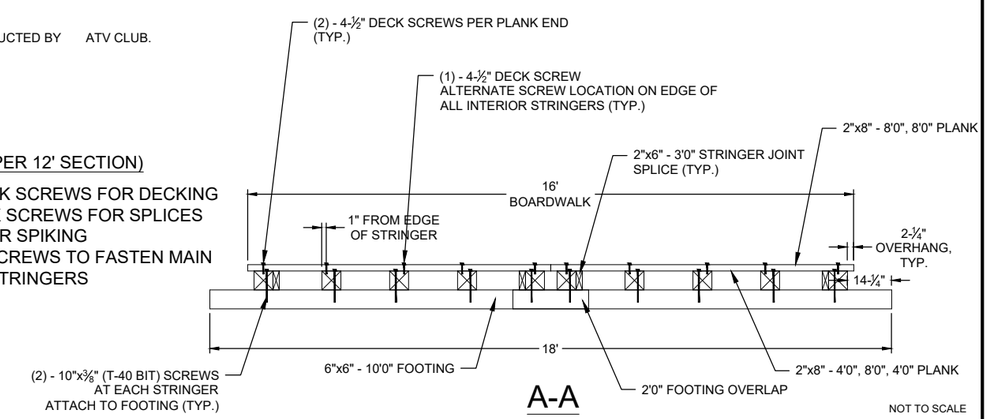

FASTENER SCHEDULE (PER 12' SECTION)

288 - 4 1/2" (T-25 BIT) DECK SCREWS FOR DECKING
40 - 4 1/2" (T-25 BIT) DECK SCREWS FOR SPLICES
8 - 10" X 3/8" (T-40 BIT) FOR SPIKING
72 - 10" X 3/8" (T-40 BIT) SCREWS TO FASTEN MAIN FOOTING TO DECK STRINGERS

NOT TO SCALE

16' BOARDWALK DETAIL

DRAWN BY: MMM/AJK					
DESIGNER: JJC/JJ					
CHECKED BY: JJC					
DESIGN TEAM	NO.	BY	DATE	REVISIONS	

SEH
PHONE: 218.741.4284
615 9TH STREET NORTH
VIRGINIA, MN 55792-3761
www.sehinc.com

TWIG AREA TRAIL
RIDERS ATV CLUB
SAINT LOUIS COUNTY,
MINNESOTA

BOARDWALK DETAILS

FILE NO.
TWIGA 181083

Save: 2/21/2024 12:03 PM akalisch Plot: 2/21/2024 12:04 PM C:\Users\AKALISCH\OneDrive - Short Elliott Hendrickson Inc\ATV Trail Documents\ATV Boardwalk Detail.dwg

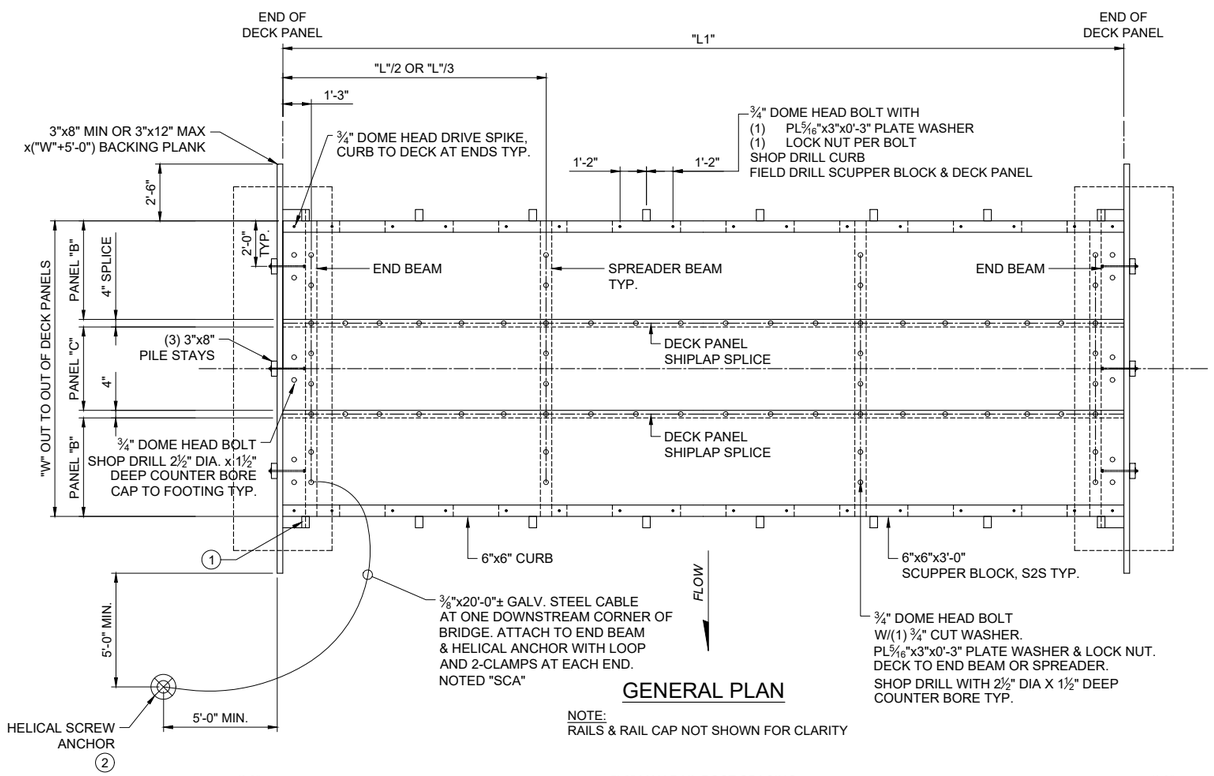

GENERAL PLAN

NOTE:
RAILS & RAIL CAP NOT SHOWN FOR CLARITY

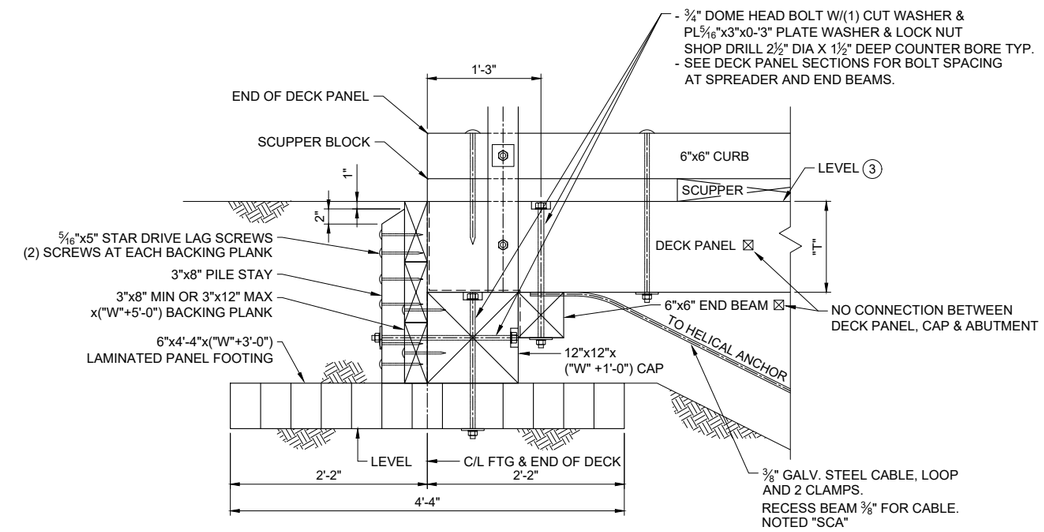

ABUTMENT SECTION

NOTE:
⊠ DO NOT FASTEN DECK PANELS OR END BEAM TO ABUTMENT.

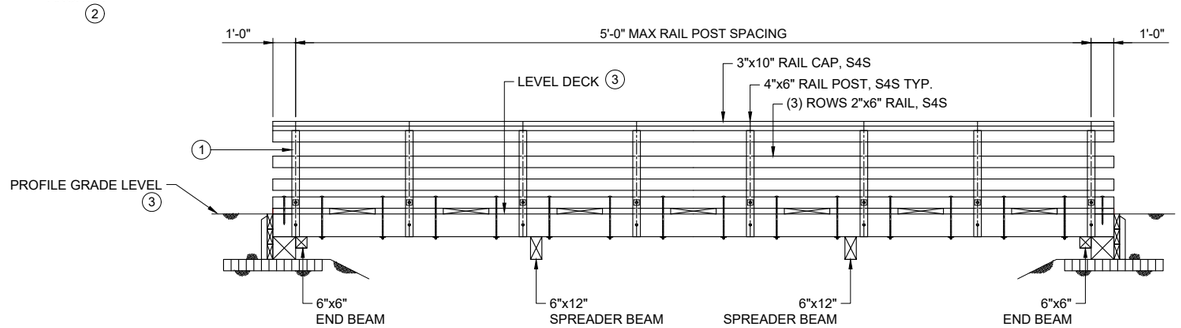

GENERAL ELEVATION

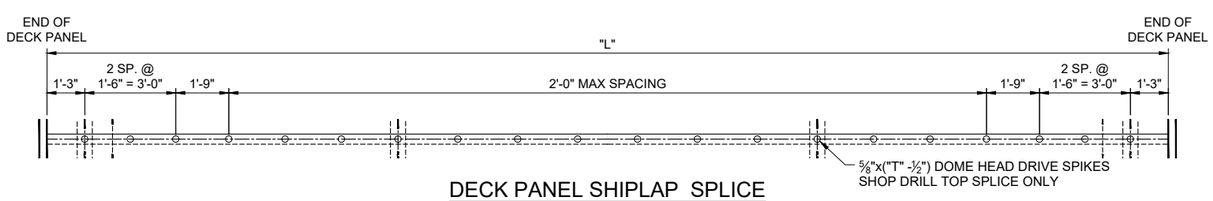

DECK PANEL SHIPLAP SPLICE

NOTES:

CONNECT CAP TO FOOTING BEFORE SETTING FOOTING.

DO NOT FASTEN DECK PANELS OR END BEAMS TO ABUTMENTS.

DECK PANEL WIDTHS SHOWN ARE APPROXIMATE.

CONTRACTOR SHOULD BE AWARE OF THE POTENTIAL TO HIT THE R.S. NAILS IN THE PREFABRICATED DECK PANELS WHEN INSTALLING THE CURB BOLTS FOR THE CURB & SCUPPER ATTACHMENT. A ¾" HOLE SAW IS RECOMMENDED IN DRILLING THROUGH THE R.S. NAILS FOR THIS ATTACHMENT.

NOTES:

1. FIELD PLACE BRIDGE NAME PLATE/LOAD LIMIT PLATE AT EACH END OF BRIDGE. PLATE SHALL STATE, "10 TON VEHICLE LOAD LIMIT".
2. HELICAL SCREW ANCHOR (UTILITY GUY ANCHOR) 1" DIA. ROD x6'-6" MIN. LENGTH WITH 10" DIA. MIN. FLIGHT PLATE, HOT DIP GALVANIZED. PLACE ANCHOR FULL DEPTH, FLUSH WITH GRADE ON OVERBANK. PLACE ANCHOR AT LEAST 5'-0" DOWNSTREAM AND BEHIND ABUTMENT END AS SHOWN. SIMILAR AT PIERS WHERE NOTED "SCA" ON SHEET B2. ONLY ONE CABLE REQUIRED PER DECK PANEL. TO BE PROVIDED BY CONTRACTOR
3. DECK IS LEVEL UNLESS SITE TRAIL PROFILE DICTATES OTHERWISE.

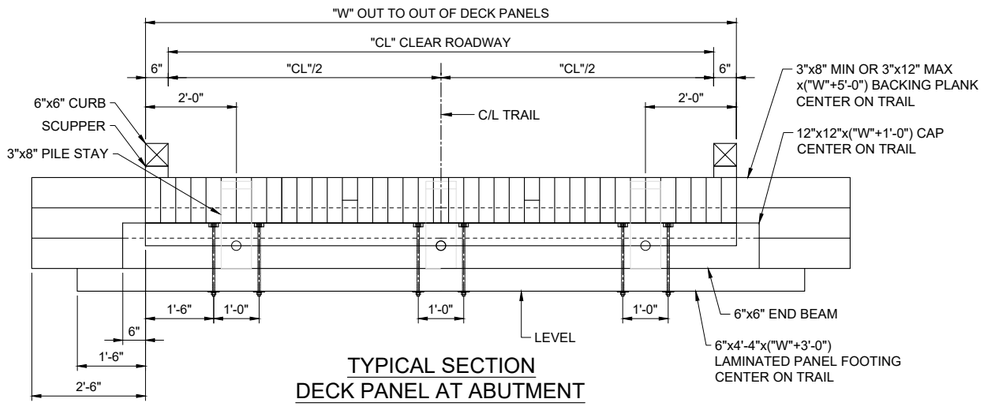

TYPICAL SECTION
DECK PANEL AT ABUTMENT

NOTE:
RAIL POSTS NOT SHOWN

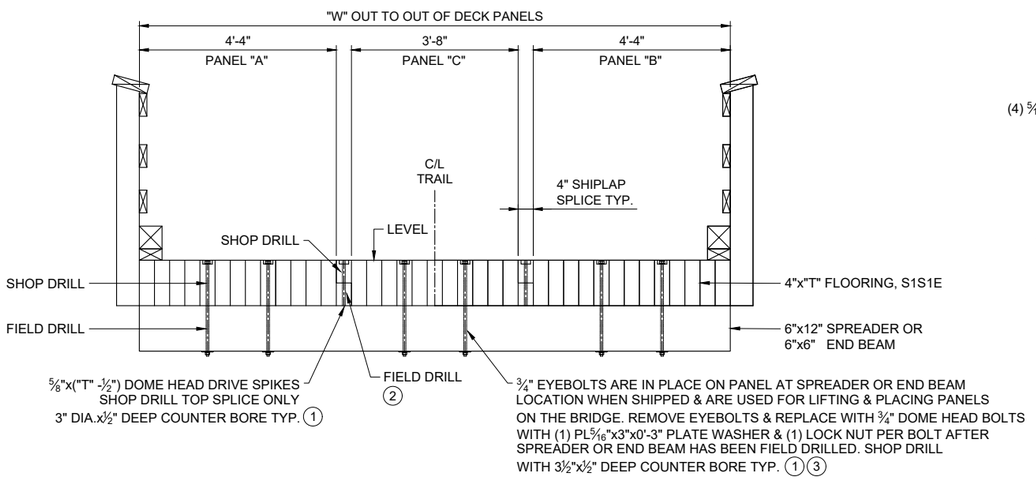

TYPICAL SECTION
DECK PANEL AT SPREADER BEAM

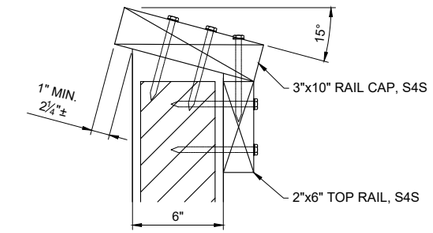

RAIL CAP DETAIL

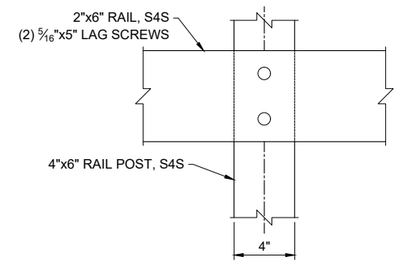

RAIL CONNECTION DETAIL

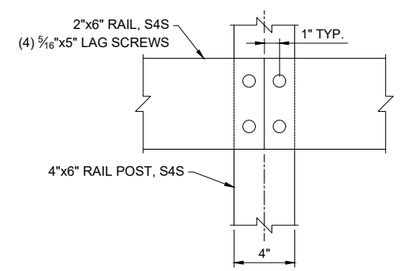

RAIL SPLICE DETAIL

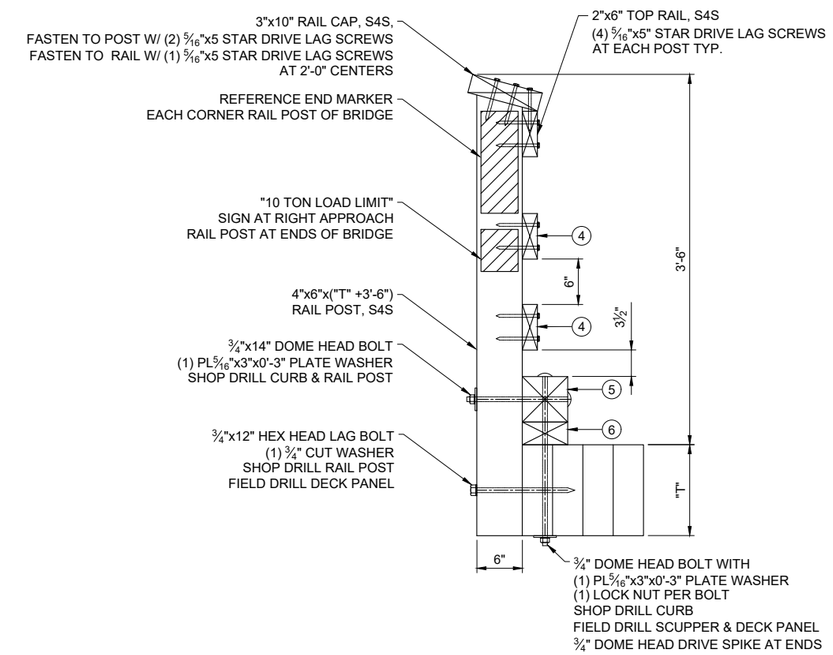

RAIL POST DETAIL

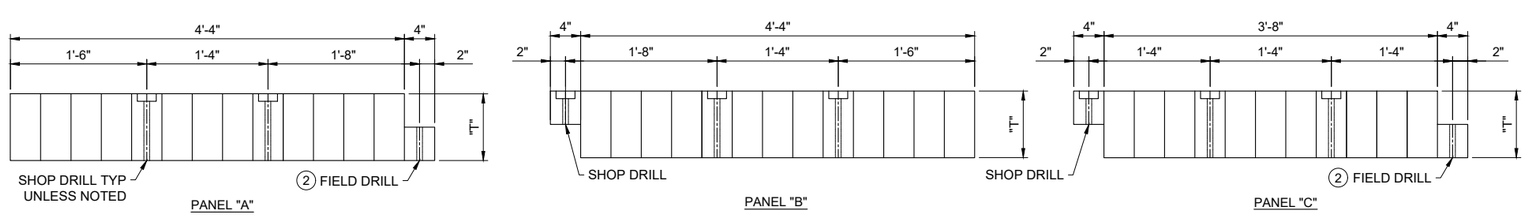

DECK PANEL SECTIONS

NOTES:

1. ALL HARDWARE PENETRATING THE TIP OR BOTTOM EDGE OF THE DECK PLANK SHALL PASS THROUGH THE CENTER OF THAT EDGE DIMENSION.
2. FIELD DRILLED HOLES IN THE LOWER SPLICE BLOCK OF EACH PANEL ARE TO BE DRILLED COMPLETELY THROUGH THE BLOCK TO PREVENT SPLITTING WHEN INSTALLING THE ⅝" DRIVE SPIKES.
3. THE CONTRACTOR SHALL INSTALL TREATED WOOD SHIMS (SUPPLIED BY CONTRACTOR) IN ALL LOCATIONS WHERE THE TOP OF THE SPREADER BEAM DOES NOT CONTACT THE BOTTOM OF THE DECK PANEL UPON TIGHTENING TO ENSURE SNUG FIT ACROSS ENTIRE DECK WIDTH. THE CONTRACTOR SHALL RETIGHTEN ALL NUTS ON THE LAST DAY OF CONSTRUCTION IN THE PRESENCE OF THE ENGINEER TO ENSURE ALL NUTS ARE PROPERLY TIGHTENED. SET THREADS ON ALL BOLTS AT NUT WITH A CENTER PUNCH AFTER TIGHTENING.
4. 2"x6" RAIL, S4S, FASTEN TO EACH RAIL POST WITH (2) 5/16"x5" STAR DRIVE LAG SCREWS FIELD DRILL. USE (4) FASTNERS AT RAIL SPLICE.
5. 6"x6" CURB, RGH., SHOP DRILL.
6. 3"x6"x3'-0" SCUPPER BLOCK, S2S (2½"), FIELD DRILL.

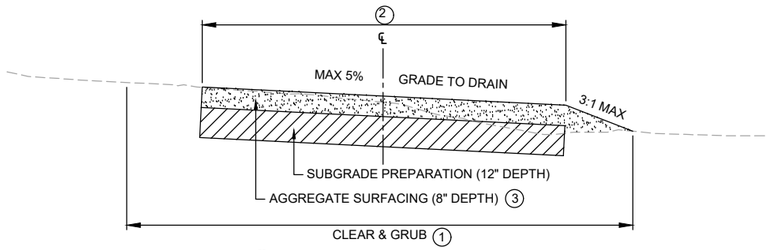

1. FOR SNOWMOBILE TRAILS - 20'
FOR ATV ONLY TRAILS - 14'

2. FOR SNOWMOBILE TRAILS - 16'
FOR ATV ONLY TRAILS - 12'

3. PLACE ADDITIONAL AGGREGATE SURFACING AS DIRECTED IN THE FIELD.

NEW TRAIL TYPICAL SECTION

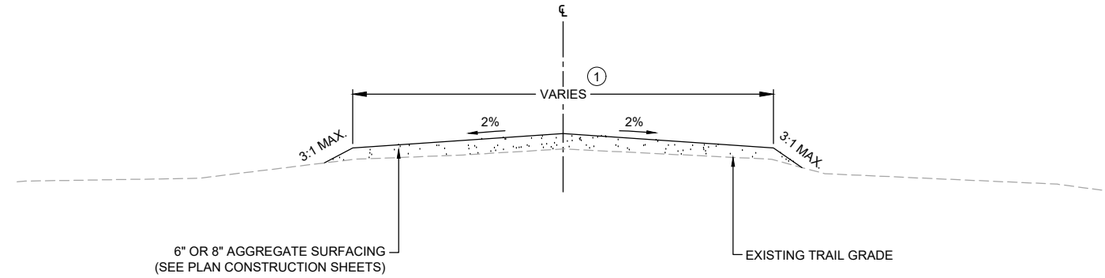

NOTES:
PLACE ADDITIONAL AGGREGATE SURFACING AS DIRECTED IN THE FIELD.

1. FOR SNOWMOBILE TRAILS - 16'
FOR ATV ONLY TRAILS - 12'

AGGREGATE SURFACING TYPICAL SECTION

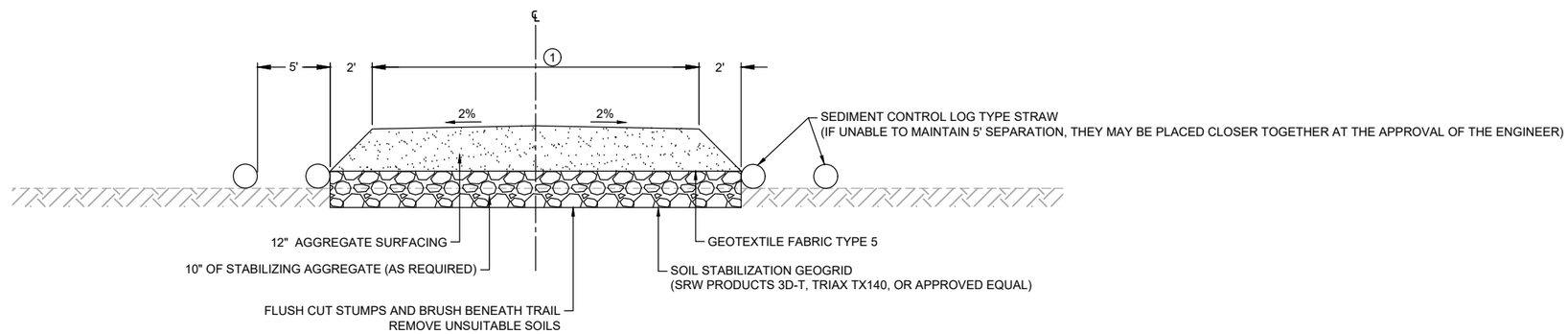

1. FOR SNOWMOBILE TRAILS - 16'
FOR ATV ONLY TRAILS - 12'

WETLAND FILL TYPICAL SECTION

		Rev.#	Revision Issue Description	Date	Rev.#	Revision Issue Description	Date
SEH Project		.			.		
Drawn By	AJK	.			.		
Designed By	JJC	.			.		
Checked By	JJC	.			.		

SEH

I HEREBY CERTIFY THAT THIS PLAN WAS PREPARED BY ME OR UNDER MY DIRECT SUPERVISION AND THAT I AM A DULY LICENSED PROFESSIONAL ENGINEER UNDER THE LAWS OF THE STATE OF MINNESOTA.

JASON J. CHOPP, PE

DATE ---- LICENSE NO. 52865

TYPICAL SECTIONS
ATV TRAIL

Attachment C: Soils Information

Map Unit Symbol	Map Unit Name	Slope	T Factor	Hydric Group	Hydric Rating	Farmland Status	Acres in Build Area	% of Total
21	Ahmeek loam, 0 to 2 percent slopes	0 - 2	Unknown	Unknown	No	All areas are prime farmland	0.07	0.01%
F145F	Ahmeek-Aldenlake complex, 18 to 45 percent slopes	18 - 45	6	B	No	Not prime farmland	0.82	0.12%
21E	Ahmeek-Canosia complex, 0 to 45 percent slopes	0 - 45	6	C/D	Yes	Not prime farmland	0.29	0.04%
F139F	Ahmeek-Canosia complex, 0 to 45 percent slopes	0 - 45	18	C	No	Not prime farmland	2.97	0.44%
F147D	Ahmeek-Canosia-Rock outcrop complex, 0 to 25 percent slopes	0 - 25	20	C/D	No	Not prime farmland	4.97	0.74%
21C	Ahmeek-Normanna-Canosia complex, 0 to 18 percent slopes	0 - 18	6	C	No	Not prime farmland	1.96	0.29%
F138D	Ahmeek-Normanna-Canosia complex, 0 to 18 percent slopes	0 - 18	40	B/D	No	Not prime farmland	13.27	1.98%
F138D	Ahmeek-Normanna-Canosia complex, 0 to 18 percent slopes	0 - 18	42	B	No	Farmland of statewide importance	15.2	2.27%
F148F	Ahmeek-Rock outcrop-Fluvaquents, frequently flooded, complex, 0 to 50 percent slopes	0 - 50	8	B/D	No	Not prime farmland	0.2	0.03%
B271A	Alborn-Sax complex, 0 to 2 percent slopes	0 - 2	1	B/D	Yes	Farmland of statewide importance	0.66	0.10%
B271A	Alborn-Sax complex, 0 to 2 percent slopes	0 - 2	1	C/D	Yes	Not prime farmland	0.22	0.03%
F121A	Aldenlake sandy loam, 0 to 3 percent slopes	0 - 3	16	A	No	Farmland of statewide importance	4.6	0.69%
F121A	Aldenlake sandy loam, 0 to 3 percent slopes	0 - 3	18	A	Yes	Not prime farmland	1.95	0.29%
F121F	Aldenlake sandy loam, 18 to 45 percent slopes	18 - 45	30	A	No	Not prime farmland	8.49	1.27%
F121B	Aldenlake sandy loam, 2 to 8 percent slopes	2 - 8	9	A	No	Farmland of statewide importance	3	0.45%
F121D	Aldenlake sandy loam, 8 to 18 percent slopes	8 - 18	57	B	No	Not prime farmland	12.57	1.88%
F121D	Aldenlake sandy loam, 8 to 18 percent slopes	8 - 18	60	B	No	Farmland of statewide importance	24.74	3.70%
F144D	Aldenlake-Ahmeek complex, 8 to 18 percent slopes	8 - 18	9	B	No	Not prime farmland	1.66	0.25%
F118B	Aldenlake-Pequaywan complex, 0 to 6 percent slopes	0 - 6	3	B	No	Not prime farmland	0.53	0.08%
F122D	Aldenlake-Pequaywan complex, pitted, 0 to 18 percent slopes	0 - 18	24	B	No	Not prime farmland	5.38	0.80%
F122F	Aldenlake-Pequaywan complex, pitted, 0 to 45 percent slopes	0 - 45	12	A	No	Not prime farmland	5.16	0.77%
F122B	Aldenlake-Pequaywan complex, pitted, 0 to 8 percent slopes	0 - 8	36	A	No	Farmland of statewide importance	9.55	1.43%
F122B	Aldenlake-Pequaywan complex, pitted, 0 to 8 percent slopes	0 - 8	36	A	Yes	Farmland of statewide importance	9.93	1.48%
F111B	Augustana-Hegberg complex, 1 to 8 percent slopes	1 - 8	15	C	No	Farmland of statewide importance	3.77	0.56%
B107A	Baden muck, depressional, 0 to 1 percent slopes	0 - 1	32	C/D	Yes	Not prime farmland	4.06	0.61%
531	Beseman muck	Unknown	1	C/D	Yes	Not prime farmland	0.25	0.04%
980	Blackhoof and Mahtowa soils	Unknown	10	C/D	Yes	Not prime farmland	0.41	0.06%
B123A	Blackhoof-Cathro-Baden complex, depressional, 0 to 1 percent slopes	0 - 1	30	C/D	Yes	Not prime farmland	1.07	0.16%
1073	Borofolists	Unknown	Unknown	Unknown	No	Not prime farmland	3.15	0.47%
1020A	Bowstring and Fluvaquents, loamy, 0 to 2 percent slopes, frequently flooded	0 - 2	19	A/D	Yes	Not prime farmland	16.7	2.50%
F103B	Brimson stony fine sandy loam, 2 to 5 percent slopes, very stony	2 - 5	87	C/D	No	Not prime farmland	31.36	4.69%
F108B	Brimson, very stony-Bugcreek, rubbly complex, 0 to 5 percent slopes	0 - 5	15	B/D	No	Not prime farmland	5.98	0.89%
F101A	Bugcreek extremely stony sandy loam, 0 to 1 percent slopes, rubbly	0 - 1	120	C/D	Yes	Not prime farmland	11.17	1.67%
F142A	Canosia loam, 0 to 2 percent slopes	0 - 2	15	C/D	Yes	Not prime farmland	2.2	0.33%
F34A	Cathro muck, depressional, 0 to 1 percent slopes	0 - 1	5	B/D	Yes	Not prime farmland	1.41	0.21%
F33A	Cathro muck, depressional, dense substratum, 0 to 1 percent slopes	0 - 1	14	A/D	Yes	Not prime farmland	4.1	0.61%
B81A	Cathro muck, depressional, duluth catena, 0 to 1 percent slopes	0 - 1	16	A/D	Yes	Not prime farmland	1.93	0.29%
355	Cloquet fine sandy loam, 0 to 2 percent slopes	0 - 2	2	B	No	Farmland of statewide importance	0.23	0.03%
355C	Cloquet fine sandy loam, 2 to 12 percent slopes	2 - 12	6	B	No	Not prime farmland	4.31	0.64%
B125B	Culver silt loam, 3 to 8 percent slopes	3 - 8	35	C/D	No	All areas are prime farmland	1.8	0.27%
B127B	Culver-Dusler-Ellsburg complex, 0 to 8 percent slopes	0 - 8	155	C/D	No	All areas are prime farmland	53.83	8.05%
B127B	Culver-Dusler-Ellsburg complex, 0 to 8 percent slopes	0 - 8	165	C/D	Yes	Farmland of statewide importance	27.95	4.18%
B126E	Duluth silt loam, 18 to 45 percent slopes	18 - 45	35	C	No	Not prime farmland	2.95	0.44%
504E	Duluth very fine sandy loam, 12 to 25 percent slopes	12 - 25	5	C	No	Not prime farmland	0.54	0.08%
504C	Duluth very fine sandy loam, 2 to 12 percent slopes	2 - 12	15	C	No	Farmland of statewide importance	10.97	1.64%
504G	Duluth very fine sandy loam, 25 to 35 percent slopes	25 - 35	5	C	No	Not prime farmland	1.99	0.30%
B126D	Duluth-Culver complex, 3 to 18 percent slopes	3 - 18	70	C	No	Not prime farmland	5.5	0.82%
B128D	Duluth-Culver-Cathro, depressional, complex, 0 to 18 percent slopes	0 - 18	10	C/D	Yes	Not prime farmland	11.29	1.69%
B130D	Duluth-Duluth, coarse substratum-Ellsburg complex, 0 to 18 percent slopes	0 - 18	5	B	No	Not prime farmland	0.53	0.08%
502	Dusler silt loam	Unknown	20	C/D	No	Prime farmland if drained	1.34	0.20%
B145B	Dusler-Culver complex, 1 to 8 percent slopes	1 - 8	10	C/D	No	All areas are prime farmland	5.51	0.82%
B124A	Dusler-Ellsburg complex, 0 to 3 percent slopes	0 - 3	20	C/D	No	Farmland of statewide importance	3.61	0.54%
B104A	Ellsburg-Baden complex, 0 to 2 percent slopes	0 - 2	15	C/D	Yes	Not prime farmland	2.58	0.39%
B144A	Ellsburg-Dusler complex, 0 to 3 percent slopes	0 - 3	20	C/D	Yes	Not prime farmland	3.42	0.51%
1005	Fluvaquents	Unknown	Unknown	(blank)	No	Not prime farmland	0.28	0.04%
F112D	Forbay-Augustana complex, 3 to 18 percent slopes	3 - 18	5	C	No	Not prime farmland	0.32	0.05%
F146A	Giese muck, 0 to 2 percent slopes, rubbly	0 - 2	21	C/D	Yes	Not prime farmland	3.64	0.54%
F134A	Giese muck, depressional, 0 to 1 percent slope	0 - 1	8	C/D	Yes	Not prime farmland	2.29	0.34%
F134A	Giese muck, depressional, 0 to 1 percent slopes	0 - 1	10	C/D	Yes	Not prime farmland	2.8	0.42%
F120A	Grayling-Cromwell complex, 0 to 3 percent slopes	0 - 3	5	A	No	Not prime farmland	0.64	0.10%

Attachment C: Soils Information

Map Unit Symbol	Map Unit Name	Slope	T Factor	Hydric Group	Hydric Rating	Farmland Status	Acres in Build Area	% of Total
F120B	Grayling-Cromwell complex, 2 to 8 percent slopes	2 - 8	3	B	No	Not prime farmland	0.44	0.07%
F120B	Grayling-Cromwell complex, 2 to 8 percent slopes	2 - 8	3	B	No	Not prime farmland	1.11	0.17%
F123D	Grayling-Grytal-Cromwell complex, pitted, 0 to 18 percent slopes	0 - 18	5	A	No	Not prime farmland	0.15	0.02%
F123B	Grayling-Grytal-Cromwell complex, pitted, 0 to 8 percent slopes	0 - 8	20	A	No	Not prime farmland	2.76	0.41%
1022A	Greenwood soils, 0 to 1 percent slopes	0 - 1	12	A/D	Yes	Not prime farmland	2.94	0.44%
F175A	Greenwood soils, dense substratum, 0 to 1 percent slopes	0 - 1	14	A/D	Yes	Not prime farmland	6.25	0.93%
B148A	Greenwood soils, duluth catena, 0 to 1 percent slopes	0 - 1	5	A/D	Yes	Not prime farmland	2.4	0.36%
F126A	Grytal sandy loam, 0 to 3 percent slopes	0 - 3	3	B	No	Not prime farmland	0.77	0.12%
F136A	Hermantown silt loam, 1 to 3 percent slopes	1 - 3	20	C/D	No	Farmland of statewide importance	1.38	0.21%
F135A	Hermantown-Canosia-Giese, depressional, complex, 0 to 3 percent slopes	0 - 3	32	C/D	Yes	Farmland of statewide importance	33.19	4.96%
F128A	Hulligan fine sandy loam, 0 to 1 percent slopes	0 - 1	20	A/D	Yes	Not prime farmland	1.91	0.29%
F127A	Hulligan mucky fine sandy loam, depressional, 0 to 1 percent slopes	0 - 1	44	A/D	Yes	Not prime farmland	6.01	0.90%
F127A	Hulligan mucky fine sandy loam, depressional, 0 to 1 percent slopes	0 - 1	45	B/D	No	Not prime farmland	14.56	2.18%
1012A	Lobo-Waskish complex, 0 to 2 percent slopes	0 - 2	2	A/D	Yes	Not prime farmland	0.23	0.03%
533	Loxley muck	Unknown	4	A/D	Yes	Not prime farmland	1.38	0.21%
B103A	Melrude-Schisler-Baden, depressional, complex, 0 to 2 percent slopes	0 - 2	5	B/D	Yes	Not prime farmland	1.04	0.16%
B121A	Merwin peat, duluth catena, 0 to 1 percent slopes	0 - 1	10	C/D	Yes	Not prime farmland	0.3	0.04%
F116A	Mooselake muck, 0 to 1 percent slopes	0 - 1	2	B/D	Yes	Not prime farmland	0.19	0.03%
F161A	Mooselake muck, dense substratum, 0 to 1 percent slopes	0 - 1	2	A/D	Yes	Not prime farmland	0.35	0.05%
V166	Mora fine sandy loam, wet	Unknown	4	C/D	No	Prime farmland if drained	0.11	0.02%
186	Nemadji fine sand	Unknown	5	A/D	No	Not prime farmland	0.2	0.03%
F102A	Nevens stony loam, 0 to 2 percent slopes, very stony	0 - 2	236	A/D	Yes	Not prime farmland	53.54	8.00%
F143B	Normanna-Aldenlake-Canosia complex, 0 to 8 percent slopes	0 - 8	24	B/D	No	Farmland of statewide importance	3.89	0.58%
F143B	Normanna-Aldenlake-Canosia complex, 0 to 8 percent slopes	0 - 8	25	B/D	Yes	All areas are prime farmland	3.75	0.56%
F137B	Normanna-Canosia-Hermantown complex, 0 to 8 percent slopes	0 - 8	88	C/D	No	Farmland of statewide importance	27.8	4.16%
F137B	Normanna-Canosia-Hermantown complex, 0 to 8 percent slopes	0 - 8	96	C/D	Yes	Not prime farmland	44.71	6.68%
F140B	Normanna-Giese, depressional, complex, pitted, 0 to 8 percent slopes	0 - 8	6	C/D	Yes	Farmland of statewide importance	1.81	0.27%
188C	Omega loamy sand, 2 to 12 percent slopes	2 - 12	15	A	No	Not prime farmland	1.92	0.29%
F125A	Pequaywan fine sandy loam, 0 to 3 percent slopes	0 - 3	52	A/D	Yes	Farmland of statewide importance	8.93	1.34%
GP	Pits, gravel-Udipsamments complex	0 - 50	Unknown	Unknown	Unranked	Not prime farmland	1.08	0.16%
1021A	Rifle soils, 0 to 1 percent slopes	0 - 1	16	A/D	Yes	Not prime farmland	3.08	0.46%
F170A	Rifle soils, dense substratum, 0 to 1 percent slopes	0 - 1	38	A/D	Yes	Not prime farmland	15.38	2.30%
F170A	Rifle soils, dense substratum, 0 to 1 percent slopes	0 - 1	39	C/D	Yes	Not prime farmland	5	0.75%
B118A	Rifle soils, duluth catena, 0 to 1 percent slopes	0 - 1	3	C/D	Yes	Not prime farmland	0.38	0.06%
F156D	Rock outcrop-Ahmeek, bedrock substratum-Barto complex, 4 to 18 percent slopes	4 - 18	1	D	No	Not prime farmland	1.1	0.16%
F117F	Rollins sandy loam, 18 to 45 percent slopes	18 -45	2	A	No	Not prime farmland	0.48	0.07%
F117D	Rollins sandy loam, 8 to 18 percent slopes	8 - 18	9	A	No	Not prime farmland	0.37	0.06%
F124D	Rollins-Pequaywan complex, pitted, 0 to 18 percent slopes	0 - 18	3	B	No	Not prime farmland	0.57	0.09%
B101A	Schisler-Ellsburg-Baden, depressional, complex, 0 to 2 percent slopes	0 - 2	5	C/D	No	Not prime farmland	1.65	0.25%
F129A	Tacoosh mucky peat, 0 to 1 percent slopes	0 - 1	11	B/D	Yes	Not prime farmland	2.77	0.41%
F151A	Tacoosh mucky peat, dense substratum, 0 to 1 percent slopes	0 - 1	34	A/D	Yes	Not prime farmland	7.29	1.09%
B122A	Tacoosh mucky peat, duluth catena, 0 to 1 percent slopes	0 - 1	3	C/D	Yes	Not prime farmland	0.72	0.11%
F104E	Toimi stony loam, 18 to 45 percent slopes, very stony	18 - 45	3	B/D	No	Not prime farmland	0.23	0.03%
F104B	Toimi stony loam, 3 to 8 percent slopes, very stony	3 -8	24	C/D	No	Not prime farmland	7.93	1.19%
F104D	Toimi stony loam, 8 to 18 percent slopes, very stony	8 - 18	72	C/D	No	Not prime farmland	11.46	1.71%
F107D	Toimi-Nevens complex, 0 to 18 percent slopes, very stony	0 - 18	6	C/D	Yes	Not prime farmland	2.2	0.33%
F106B	Toimi-Nevens-Brimson complex, 0 to 8 percent slopes, very stony	0 - 8	30	B/D	No	Not prime farmland	11.66	1.74%
F150A	Twig-Tacoosh-Giese complex, depressional, 0 to 1 percent slopes	0 - 1	7	C/D	Yes	Not prime farmland	1.78	0.27%
F155B	Udalfs-Eutrudepts complex, 0 to 8 percent slopes	0 - 8	5	B/D	No	Farmland of statewide importance	0.51	0.08%
1026A	Udifluvents, loamy, 0 to 2 percent slopes, occasionally flooded	0 - 2	20	B/D	No	Not prime farmland	2.37	0.35%
F163D	Urban land-Mesaba-Rock outcrop complex, 1 to 18 percent slopes	1 - 18	2	B	No	Not prime farmland	0.04	0.01%
F158B	Urban land-Normanna-Canosia complex, 0 to 8 percent slopes	0 - 8	Unknown	Unknown	Unranked	Not prime farmland	0.97	0.15%
1014A	Uskabwanka peat, 0 to 1 percent slope	0 - 1	Unknown	Unknown	Unranked	Not prime farmland	0.28	0.04%
F109A	Wahbegon, depressional-Eldes complex, 0 to 2 percent slopes	0 - 2	10	B/D	Yes	Not prime farmland	0.56	0.08%
W	Water	0	Unknown	Unknown	Unranked	Not prime farmland	0.76	0.11%
I-W	Water, intermittent	0	Unknown	Unknown	Unranked	Not prime farmland	0.14	0.02%
							668.85	**100.00%**

Attachment D - Existing Public Water Crossings

Count	Stream Name (Kittle Number)	DNR Shoreland Classification	Trout Stream?	Crossing	Trail	Trail Group	Route Category	Coordinates
1	Artichoke River (S-002-018)	Tributary	N	Existing	Lamb Rd	Road Route Connections	1	46.89705812,-92.57779167
2	Artichoke River (S-002-018)	Tributary	N	Existing	Burnett to Alborn Road	Road Route Connections	1	46.92527887,-92.56212896
3	Artichoke River (S-002-018)	Tributary	N	Existing	Swan Lake Rd Road Route	Road Route Connections	1	46.97412718,-92.57312151
4	Artichoke River (S-002-018)	Tributary	N	Existing	Stoney Brook Road Route	Road Route Connections	1	46.99041148,-92.55495872
5	Artichoke River (S-002-018)	Tributary	N	Existing	Brookston to Burnett	Brookston Loops	1	46.87006014,-92.60094178
6	Beartrap Creek (S-002-016-001)	Tributary	Y	Existing	Burnett to Twig	Road Route Connections	1	46.8981902,-92.49631953
7	Beartrap Creek (S-002-016-001)	Tributary	Y	Existing	Independence Rd	Road Route Connection	1	46.87455309,-92.47037676
8	Beartrap Creek (S-002-016-001)	Tributary	Y	Existing	Saginaw to Burnett Road	Road Route Connections	1	46.87044638,-92.4915128
9	Beartrap Creek (S-002-016-001)	Tributary	Y	Existing	Saginaw to Burnett Road	Road Route Connections	1	46.87298817,-92.49388125
10	Beartrap Creek (S-002-016-001-B001)	Tributary	N	Existing	Burnett to Twig	Road Route Connections	1	46.89830223,-92.4968159
11	Beaver River (S-002-016-008)	Tributary	N	Existing	Fredenburg Trail	Taft to Canyon	2B	46.95808512,-92.31302267
12	Beaver River (S-002-016-008)	Tributary	N	Existing	Fish Lake Dam Road Route	Road Route Connections	1	46.95653595,-92.27830875
13	Beaver River (S-002-016-008)	Tributary	Y	Existing	Lavaque Spur Road Route	Road Route Connections	1	46.95427927,-92.21641204
14	Bug Creek (S-002-035-015)	Tributary	N	Existing	3 Lakes Rd to Comstock Lk Rd	Road Route Connections	1	47.11104316,-92.35075035
15	Chalberg Creek (S-002-016-002)	Tributary	Y	Existing	Hwy 8 Road Route	Lumberjack Extension	1	46.92356318,-92.43170627
16	Chalberg Creek (S-002-016-002)	Tributary	Y	Existing	CR 8 Road Route	Road Route Connections	1	46.92363368,-92.47482612
17	Chalberg Creek (S-002-016-002)	Tributary	Y	Existing	CR 8 Road Route	Road Route Connections	1	46.92368462,-92.47865051
18	Chalberg Creek (S-002-016-002)	Tributary	Y	Existing	CR 8 Road Route	Road Route Connections	1	46.92381692,-92.48862995
19	Chicken Creek (S-002-016-005)	Tributary	Y	Existing	Independence FR Spine Trail	Taft to Canyon	2B	46.97558878,-92.43031242
20	Chicken Creek (S-002-016-005)	Tributary	Y	Existing	Independence FR to Mud Lake	Taft to Canyon	2B	46.97034808,-92.43549944
21	Chicken Creek (S-002-016-005)	Tributary	Y	Existing	Independence FR to Harris Rd	Taft to Canyon	2B	47.00173899,-92.40976994
22	Cloquet River (S-002-016)	Remote	N	Existing	Taft Rd	Road Route Connections	1	46.98321714,-92.2440072
23	Cloquet River (S-002-016)	Remote	N	Existing	Hwy 53 to Taft	Lumberjack Extension	2C	46.97534209,-92.34448202
24	Cloquet River (S-002-016)	Remote	N	Existing	Saginaw to Burnett Road	Road Route Connections	1	46.8963015,-92.51505664
25	Cloquet River (S-002-016)	Remote	N	Existing	CR 8 Road Route	Road Route Connections	1	46.92387973,-92.49339094
26	Cloquet River (S-002-016)	Remote	N	Existing	Munger Shaw Road Route	Road Route Connections	1	46.95565246,-92.34380335
27	Cloquet River (S-002-016)	Remote	N	Existing	Burnett to Twig	Road Route Connections	1	46.89997756,-92.50519917
28	Coolidge Creek (S-002-035-019-002)	Tributary	Y	Existing	Comstock Lk Road Route	Road Route Connections	1	47.20783106,-92.21580152
29	Crystal Creek (S-002-011)	Tributary	N	Existing	Proctor to Scanlon	Road Route Connections	2C	46.70446868,-92.40792894
30	Dutch Slough (S-002-014-002)	Tributary	Y	Existing	Proctor to Lumberjack Road Route	Road Route Connections	1	46.80874387,-92.44801454
31	Floodwood River (S-002-032)	Tributary	N	Existing	Hwy 8 & CR 965 Road Route	Floodwood Loop	1	46.92789304,-92.91485031
32	Gimlet Creek (S-002-035-019)	Tributary	Y	Existing	Camp 26 to Hwy 53	Road Route Connections	1	47.2562691,-92.13442907
33	Gimlet Creek (S-002-035-019)	Tributary	Y	Existing	Comstock Lk Road Route	Road Route Connections	1	47.22297159,-92.21096226
34	Hay Creek (S-002-010-002)	Tributary	Y	Existing	North Cloquet Rd Route	Road Route Connections	1	46.73577748,-92.35532183
35	Hay Creek (S-002-010-002)	Tributary	Y	Existing	Munger to Morris Thomas Connect	Road Route Connections	1	46.77918216,-92.38945668
36	Hay Creek (S-002-010-002)	Tributary	Y	Existing	Stark Rd Route to Proctor	Road Route Connections	1	46.7499671,-92.36547697
37	Hellwig Creek (S-002-016-004)	Tributary	Y	Existing	Independence FR Spine Trail	Taft to Canyon	2B	46.96404907,-92.46048772
38	Hellwig Creek (S-002-016-004)	Tributary	Y	Existing	Harris Rd	Road Route Connections	1	47.03978238,-92.46339168
39	Hellwig Creek (S-002-016-004)	Tributary	Y	Existing	Canyon Connector Road Route	Road Route Connections	1	47.02546083,-92.47433005
40	Hellwig Creek (S-002-016-004)	Tributary	Y	Existing	Shipley Rd Road Route	Road Route Connections	1	46.99645798,-92.48056512
41	Hunter Lake Outlet (S-002-016-008.5)	Tributary	N	Existing	Taft Rd	Road Route Connections	1	46.99554372,-92.28699605
42	Kingsbury Creek (S-002-003)	Tributary	Y	Existing	Proctor to Scanlon	Road Route Connections	2C	46.7360202,-92.21709386
43	Kingsbury Creek (S-002-003)	Tributary	Y	Existing	Proctor to Lumberjack Road Route	Road Route Connections	1	46.76589633,-92.23794959
44	Kingsbury Creek (S-002-003)	Tributary	Y	Existing	Stark Rd Route to Proctor	Road Route Connections	1	46.74388779,-92.22740173
45	Lester River (S-005)	Forested	N	Existing	Fredenburg to NSST Road Route	Road Route Connections	1	46.98163084,-92.0798465
46	McCarty River (S-002-029)	Tributary	N	Existing	Hwy 8 & CR 965 Road Route	Floodwood Loop	1	46.89648817,-92.84813009
47	Midway River (S-002-010)	Tributary	N	Existing	Proctor to Lumberjack Road Route	Road Route Connections	1	46.79308864,-92.24321879
48	Midway River (S-002-010)	Tributary	N	Existing	Stark Rd Route to Proctor	Road Route Connections	1	46.74970562,-92.30222539
49	Midway River (S-002-010)	Tributary	Y	Existing	Proctor to Scanlon	Road Route Connections	2C	46.70697437,-92.36875878
50	Midway River (S-002-010)	Tributary	Y	Existing	North Cloquet Rd Route	Road Route Connections	1	46.73526375,-92.31637869
51	Moonshine Creek (S-002-035-017.5)	Tributary	N	Existing	3 Lakes Rd to Comstock Lk Rd	Road Route Connections	1	47.17381112,-92.34473905
52	Mud Hen Creek (S-002-050)	Tributary	N	Existing	Camp 26 to Hwy 53	Road Route Connections	1	47.35754165,-92.41319386
53	Mud Hen Creek (S-002-050)	Tributary	N	Existing	Camp 26 to Hwy 53	Road Route Connections	1	47.35812094,-92.47358278
54	Paleface Creek (S-002-035-012-001)	Tributary	N	Existing	Melrude Connector	Road Route Connections	1	47.23824965,-92.41126549
55	Paleface River (S-002-035-012)	Tributary	N	Existing	Camp 26 to Hwy 53	Road Route Connections	1	47.29963854,-92.24194658
56	Paleface River (S-002-035-012)	Tributary	N	Existing	Camp 26 to Hwy 53	Road Route Connections	1	47.29968182,-92.23228116
57	Palo Creek (S-002-035-017.8)	Tributary	N	Existing	Cotton to Bug Creek FMR	Road Route Connections	1	47.18853888,-92.26998214
58	Picnic Creek (S-002-035-017)	Tributary	N	Existing	Cotton to Bug Creek FMR	Road Route Connections	1	47.18808294,-92.35668501
59	Pine River (S-002-014)	Tributary	Y	Existing	Proctor to Lumberjack Road Route	Road Route Connections	1	46.80793373,-92.40527251
60	Pine River (S-002-014)	Tributary	N	Existing	Cast Iron Rd Route	Road Route Connections	1	46.85125317,-92.38006491
61	Pine River (S-002-014)	Tributary	N	Existing	Munger Shaw Rd Route	Road Route Connections	1	46.86855278,-92.34264306

Count	Stream Name (Kittle Number)	DNR Shoreland Classification	Trout Stream?	Crossing	Trail	Trail Group	Route Category	Coordinates
62	Pine River (S-002-014)	Tributary	N	Existing	Cast Iron Rd Route	Road Route Connections	1	46.86268082,-92.32124837
63	Porcupine Creek (S-002-035-024)	Tributary	N	Existing	Comstock Lake Rd to Hwy 16	Road Route Connections	1	47.34293622,-92.06714434
64	Rocky Run (S-002-010-004)	Tributary	Y	Existing	Proctor to Lumberjack Road Route	Road Route Connections	1	46.79297723,-92.26779768
65	St. Louis River (S-002)	Forested, Remote	N	Existing	Proctor to Scanlon	Road Route Connections	2C	46.70394118,-92.41754367
66	St. Louis River (S-002)	Forested, Remote	N	Existing	Hwy 8 & CR 965 Road Route	Floodwood Loop	1	46.92894906,-92.90441735
67	St. Louis River (S-002)	Forested, Remote	N	Existing	Brookston to Culver Road	Road Route Connections	1	46.86977796,-92.60328714
68	St. Louis River (S-002)	Forested, Remote	N	Existing	CR 862 to Heritage FR	Road Route Connections	2B	46.84961317,-92.57634202
69	Stoney Brook (S-002-017)	Tributary	N	Existing	Hwy 2 to Brookston Road Route	Lumberjack to Brookston	1	46.86158382,-92.60495179
70	Unnamed Stream (S-002-003-004)	Tributary	N	Existing	Proctor Route 1	Road Route Connections	1	46.75064052,-92.21858171
71	Unnamed Stream (S-002-003-004.2)	Tributary	N	Existing	Stark Rd Route to Proctor	Road Route Connections	1	46.74482401,-92.23714911
72	Unnamed Stream (S-002-007-010)	Tributary	N	Existing	Becks Rd to Buffalo House Road Route	Road Route Connections	1	46.70159647,-92.28527723
73	Unnamed Stream (S-002-007-010-001-003)	Tributary	N	Existing	LUP Under I -35	Road Route Connections	2C	46.70391501,-92.302736
74	Unnamed Stream (S-002-007-010-001-003)	Tributary	N	Existing	Proctor to Scanlon	Road Route Connections	2C	46.70481114,-92.30348455
75	Unnamed Stream (S-002-010-001)	Tributary	N	Existing	Proctor to Scanlon	Road Route Connections	2C	46.70696261,-92.3932086
76	Unnamed Stream (S-002-010-002.3)	Tributary	Y	Existing	North Cloquet Rd Route	Road Route Connections	1	46.72575777,-92.25025254
77	Unnamed Stream (S-002-010-002.3)	Tributary	Y	Existing	North Cloquet Rd Route	Road Route Connections	1	46.73524238,-92.30237705
78	Unnamed Stream (S-002-010-002.3-001)	Tributary	Y	Existing	North Cloquet Rd Route	Road Route Connections	1	46.73420293,-92.2713226
79	Unnamed Stream (S-002-010-002.3-B001)	Tributary	Y	Existing	North Cloquet Rd Route	Road Route Connections	1	46.73522184,-92.29978716
80	Unnamed Stream (S-002-010-002.52)	Tributary	N	Existing	Stark Rd Route to Proctor	Road Route Connections	1	46.74962751,-92.32282568
81	Unnamed Stream (S-002-010-002.55)	Tributary	Y	Existing	Stark Rd Route to Proctor	Road Route Connections	1	46.74975971,-92.30951206
82	Unnamed Stream (S-002-010-002.8)	Tributary	N	Existing	Stark Rd Route to Proctor	Road Route Connections	1	46.74956772,-92.29128676
83	Unnamed Stream (S-002-010-002-004)	Tributary	Y	Existing	Munger to Morris Thomas Connect	Road Route Connections	1	46.77936233,-92.37438816
84	Unnamed Stream (S-002-010-002-004-B001)	Tributary	N	Existing	Munger to Morris Thomas Connect	Road Route Connections	1	46.77936158,-92.37447286
85	Unnamed Stream (S-002-010-003)	Tributary	Y	Existing	Proctor to Lumberjack Road Route	Road Route Connections	1	46.80756155,-92.3058517
86	Unnamed Stream (S-002-010-003.9)	Tributary	N	Existing	Proctor to Lumberjack Road Route	Road Route Connections	1	46.77783615,-92.23819903
87	Unnamed Stream (S-002-010-004-001)	Tributary	Y	Existing	Proctor to Lumberjack Road Route	Road Route Connections	1	46.79310545,-92.25985821
88	Unnamed Stream (S-002-010-004-006)	Tributary	Y	Existing	Solway Rd Road Route	Road Route Connections	1	46.82946822,-92.30180619
89	Unnamed Stream (S-002-010-006)	Tributary	N	Existing	Proctor to Lumberjack Road Route	Road Route Connections	1	46.78560879,-92.23822938
90	Unnamed Stream (S-002-011.5)	Tributary	Y	Existing	Scanlon Water Park	Road Route Connections	2B	46.70402835,-92.42096672
91	Unnamed Stream (S-002-011.5)	Tributary	Y	Existing	Scanlon Along Hwy 45	Road Route Connections	1	46.70386015,-92.4243283
92	Unnamed Stream (S-002-011.5)	Tributary	Y	Existing	33 to Scanlon	Road Route Connections	1	46.701825,-92.43547671
93	Unnamed Stream (S-002-014-002-003)	Tributary	Y	Existing	Witte Rd Connector	Road Route Connections	1	46.82323377,-92.45383969
94	Unnamed Stream (S-002-014-003)	Tributary	Y	Existing	Munger to Morris Thomas Connect	Road Route Connections	1	46.77898408,-92.40522755
95	Unnamed Stream (S-002-014-004)	Tributary	Y	Existing	Proctor to Lumberjack Road Route	Road Route Connections	1	46.80818876,-92.37475165
96	Unnamed Stream (S-002-016-001.5)	Tributary	Y	Existing	CR 8 Road Route	Road Route Connections	1	46.92407866,-92.50856908
97	Unnamed Stream (S-002-016-001.5)	Tributary	Y	Existing	McArthur & Hwy 47	Road Route Connections	1	46.92584072,-92.51218992
98	Unnamed Stream (S-002-016-001-001)	Tributary	Y	Existing	Burnett to Twig	Road Route Connections	1	46.89482439,-92.48007887
99	Unnamed Stream (S-002-016-004-004)	Tributary	Y	Existing	Canyon Connector Road Route	Road Route Connections	1	47.02545543,-92.47560087
100	Unnamed Stream (S-002-016-005-004)	Tributary	Y	Existing	Mud Lake to Harris Rd	Taft to Canyon	2B	47.00845022,-92.39580402
101	Unnamed Stream (S-002-016-006-001)	Tributary	Y	Existing	Radio Rd Trail	Canyon to Cotton	2C	46.99068319,-92.33033564
102	Unnamed Stream (S-002-016-006-003)	Tributary	Y	Existing	Radio Rd Trail	Canyon to Cotton	2C	47.02534157,-92.33913237
103	Unnamed Stream (S-002-016-006-003)	Tributary	Y	Existing	Wood Duck Trail	Canyon to Cotton	2C	47.03692278,-92.33799876
104	Unnamed Stream (S-002-016-006-004)	Tributary	N	Existing	Radio Rd Trail	Canyon to Cotton	2C	47.05160175,-92.34178242
105	Unnamed Stream (S-002-016-006-004)	Tributary	N	Existing	Radio Rd Trail	Canyon to Cotton	2C	47.05434293,-92.33861763
106	Unnamed Stream (S-002-016-006-004)	Tributary	N	Existing	Radio Rd Trail	Canyon to Cotton	2C	47.06338329,-92.32341608
107	Unnamed Stream (S-002-016-006-008)	Tributary	Y	Existing	3 Lakes Rd	Road Route Connections	1	47.10439714,-92.29243642
108	Unnamed Stream (S-002-016-008.7)	Tributary	N	Existing	Taft Rd	Road Route Connections	1	46.99377349,-92.24728786
109	Unnamed Stream (S-002-016-008-001-002)	Tributary	N	Existing	Munger Shaw Road Route	Road Route Connections	1	46.91089694,-92.33961716
110	Unnamed Stream (S-002-016-008-002)	Tributary	Y	Existing	Midway Cut Across	West Lavaque Trail System	2C	46.90178762,-92.27460104
111	Unnamed Stream (S-002-016-008-002)	Tributary	Y	Existing	Midway Rd Route Connector	West Lavaque Trail System	1	46.88901699,-92.28050521
112	Unnamed Stream (S-002-016-008-002)	Tributary	Y	Existing	Midway Rd Route Connector	West Lavaque Trail System	1	46.90013754,-92.28057207
113	Unnamed Stream (S-002-016-008-008)	Tributary	Y	Existing	Lavaque Rd Road Route	West Lavaque Trail System	1	46.88006238,-92.21715478
114	Unnamed Stream (S-002-016-008-009)	Tributary	N	Existing	Lavaque Rd Road Route	West Lavaque Trail System	1	46.87276379,-92.21706029
115	Unnamed Stream (S-002-016-011-002)	Tributary	N	Existing	Wood Duck Trail	Canyon to Cotton	2C	47.07020854,-92.22911705
116	Unnamed Stream (S-002-016-011-003)	Tributary	N	Existing	3 Lakes Rd	Road Route Connections	1	47.1109591,-92.21385058
117	Unnamed Stream (S-002-016-011-003)	Tributary	N	Existing	Twin Lakes Rd	Canyon to Cotton	1	47.10820624,-92.21571078
118	Unnamed Stream (S-002-016-011-004)	Tributary	N	Existing	Wood Duck Trail - South Route	Canyon to Cotton	2C	47.09365545,-92.17573666
119	Unnamed Stream (S-002-018-006)	Tributary	N	Existing	Burnett to Alborn Road	Road Route Connections	1	46.92469537,-92.5450819
120	Unnamed Stream (S-002-018-013)	Tributary	Y	Existing	Shipley Rd Road Route	Road Route Connections	1	46.99655195,-92.53734274
121	Unnamed Stream (S-002-018-013)	Tributary	Y	Existing	Shipley Rd Road Route	Road Route Connections	1	46.99665354,-92.54118102
122	Unnamed Stream (S-002-035-014.5)	Tributary	N	Existing	Cotton to Bug Creek FMR	Road Route Connections	1	47.17358767,-92.39343525

Count	Stream Name (Kittle Number)	DNR Shoreland Classification	Trout Stream?	Crossing	Trail	Trail Group	Route Category	Coordinates
123	Unnamed Stream (S-002-035-015-000.5)	Tributary	N	Existing	3 Lakes Rd to Comstock Lk Rd	Road Route Connections	1	47.12969335,-92.34470275
124	Unnamed Stream (S-002-035-019-002-001)	Tributary	N	Existing	Cotton to Bug Creek FMR	Road Route Connections	1	47.19859569,-92.2466277
125	Unnamed Stream (S-002-035-019-002-002)	Tributary	N	Existing	Cotton to Bug Creek FMR	Road Route Connections	1	47.1985659,-92.2341994
126	Unnamed Stream (S-002-035-019-003)	Tributary	Y	Existing	Comstock Lk Road Route	Road Route Connections	1	47.23356429,-92.18590623
127	Unnamed Stream (S-002-035-019-003)	Tributary	Y	Existing	Comstock Lk Road Route	Road Route Connections	1	47.24088267,-92.18490876
128	Unnamed Stream (S-002-035-019-003)	Tributary	Y	Existing	Comstock Lk Road Route	Road Route Connections	1	47.26253749,-92.1544312
129	Unnamed Stream (S-002-035-022-000.5)	Tributary	N	Existing	Comstock Lake Rd to Hwy 16	Road Route Connections	1	47.29295186,-92.0915256
130	Unnamed Stream (S-002-035-023-000.8)	Tributary	N	Existing	Comstock Lake Rd to Hwy 16	Road Route Connections	1	47.36056037,-92.06538975
131	Unnamed Stream (S-005-018)	Tributary	Y	Existing	Fredenburg to NSST Road Route	Road Route Connections	1	46.98164746,-92.08737094
132	Us-kab-wan-ka River (S-002-016-006)	Tributary	Y	Existing	3 Lakes Rd	Road Route Connections	1	47.10425416,-92.28656479
133	Us-kab-wan-ka River (S-002-016-006)	Tributary	Y	Existing	Lost Lake Trail	Taft to Canyon	2C	46.98185328,-92.3339362
134	Water Hen Creek (S-002-050-003)	Tributary	N	Existing	Camp 26 to Hwy 53	Road Route Connections	1	47.32192021,-92.29622795
135	Whiteface River (S-002-035)	Forested, Remote	N	Existing	Camp 26 to Hwy 53	Road Route Connections	1	47.27041836,-92.20471376
136	Whiteface River (S-002-035)	Forested, Remote	N	Existing	Comstock Lake Rd to Hwy 16	Road Route Connections	1	47.3239225,-92.07228846
137	Whiteface River (S-002-035)	Forested, Remote	N	Existing	Cotton to Bug Creek FMR	Road Route Connections	1	47.16928323,-92.46366593
138	Whiteface River (S-002-035)	Forested, Remote	N	Existing	Cotton to Bug Creek FMR	Road Route Connections	1	47.18450876,-92.34663481
139	Whiteface River, South Branch (S-002-035-022)	Tributary	N	Existing	Comstock Lake Rd to Hwy 16	Road Route Connections	1	47.28446737,-92.09251208

Minnesota Department of Natural Resources
Division of Ecological & Water Resources
500 Lafayette Road, Box 25
St. Paul, MN 55155-4025

August 26, 2026

John Thayer
Short Elliott Hendrickson, Inc.

RE: Natural Heritage Review of the proposed **Twig Area Trail Riders Trail Improvements: Clone Of 2025-00462**, St. Louis and Carlton County

Dear John Thayer,

For all correspondence regarding the Natural Heritage Review of this project please include the project ID **MCE-2025-00462-02** in the email subject line.

As requested, the Minnesota Natural Heritage Information System has been reviewed to determine if the proposed project has the potential to impact any rare species or other significant natural features. Based on the project details provided with the request, the following rare features may be impacted by the proposed project:

Ecologically Significant Areas

For reference, a Conservation Planning Report, which includes a detailed list of ecologically significant areas in the proposed project area, has been created and uploaded to the project page (2025-00462-02-CPR).

- The Minnesota Biological Survey (MBS) has identified Sites of Biodiversity Significance within the vicinity of the proposed project. Sites of Biodiversity Significance (MBS Sites) have varying levels of native biodiversity and are ranked based on the relative significance of this biodiversity at a statewide level. Factors taken into account during the ranking process include the number of rare species documented within the site, the quality of the native plant communities in the site, the size of the site, and the context of the site within the landscape. **The DNR recommends avoidance of MBS Sites ranked *High* or *Outstanding***.

- DNR Native Plant Communities (NPCs) have been documented within the vicinity of the proposed project. A native plant community is a group of native plants that interact with each other and with their environment in ways not greatly altered by modern human activity or by introduced organisms. Native plant communities are classified and described by considering vegetation, hydrology, landforms, soils, and natural disturbance regimes. DNR NPC types are given a Conservation Status Rank that reflects the relative rarity and endangerment of the community type in Minnesota. Conservation Status Ranks range from S1 (*critically imperiled*) to S5 (*secure, common, widespread, and abundant*); NPCs with a Conservation Status Rank of S1 through S3 are considered rare in Minnesota. **The DNR recommends avoidance of rare NPCs (ranked S1-S3).**

- Old-growth forests may be impacted by the proposed project. Old-growth forests are natural forests that have developed over a long period of time, generally at least 120 years, without experiencing severe, stand-replacing disturbances such as fires, windstorms, or logging. Old-growth forests are a unique, nearly vanished piece of Minnesota's history and ecology; less than 4% of Minnesota's old-growth forests remain. **The DNR recommends avoidance of old growth forests.** If avoidance is not feasible, please coordinate with your DNR Regional Ecologist to avoid or minimize disturbance.

- **Fish Lake Flowage** has been identified as a Lake of *Outstanding* Biological Significance. Lakes of Biological Significance were ranked as *Outstanding, High or Moderate* based on unique plant and animal presence. This particular lake was ranked based on its fish, bird, and plant presence.

- We encourage you to consider project alternatives that would avoid or minimize disturbance to these ecologically significant areas. Actions to minimize disturbance may include, but are not limited to, the following recommendations:
    - As much as possible, operate within already-disturbed areas.
    - Minimize width of trail.
    - Minimize project footprint within MBS Sites ranked *High* or *Outstanding* and rare NPCs.
    - Conduct surveys to better document resource impact and designate areas to avoid
    - Do not route trails through wet swales or depressions, or sensitive rock outcrop areas.
    - Bridge all stream and wetland crossings.
    - Retain a buffer between proposed activities and the MBS Sites or other sensitive areas.
    - Minimize vehicular disturbance in the area (allow only vehicles/equipment necessary for construction activities).
    - Do not park equipment or stockpile supplies in the area.
    - Do not place spoil within MBS Sites or other sensitive areas.
    - Use effective erosion prevention and sediment control measures.
    - Inspect and clean equipment prior to operating and follow recommendations to prevent the spread of invasive species.
    - Trail maintenance plans should address erodible soils, especially in areas of steep topography.
    - Use signage to encourage visitors to stay on designated trails.
    - Revegetate disturbed soil with native species suitable to the local habitat as soon after construction as possible.
    - Use only weed-free mulches, topsoils, and seed mixes.
    - Reference the Guidelines for Managing and Restoring Natural Plant Communities along Trails and Waterways for additional information.

- MBS Sites of Biodiversity Significance and DNR Native Plant Communities can be viewed using the Explore page in Minnesota Conservation Explorer (MCE) or their GIS shapefiles can be downloaded from the MN Geospatial Commons. Reference the MBS Site Biodiversity Significance and Native Plant Community websites for information on interpreting the data. To receive a list of ecologically significant areas in the vicinity of your project, create a Conservation Planning Report using the Explore page in MCE.

- If the Wetland Conservation Act (WCA) is applicable to this project, please note that native plant communities with a Conservation Status Rank of S1 through S3 or wetlands within *High* or *Outstanding* MBS Sites of Biodiversity Significance may qualify as Rare Natural Communities (RNC) under WCA. Minnesota Rules, part 8420.0515, subpart 3 states that a wetland replacement plan for activities that modify a RNC must be denied if the local government unit determines the proposed activities will permanently adversely affect the RNC. If the proposed project includes a wetland replacement plan under WCA, please contact your DNR Regional Ecologist for further evaluation. Please visit WCA Program Guidance and Information for additional information, including the RNC Technical Guidance.

State-listed Species

- Several state-listed plant species have been documented in the vicinity of the proposed project; these are listed in table below. Minnesota's Endangered Species Statute (Minnesota Statutes, section 84.0895) and associated Rules (Minnesota Rules, part 6212.1800 to 6212.2300 and 6134) prohibit the take of endangered or threatened plants or animals, including their parts or seeds, without a permit. **To demonstrate avoidance, a qualified surveyor will need to determine if suitable habitat exists within the activity impact area and, if so, conduct a survey prior to any project activities.** Although species of special concern are not regulated under Minnesota's Endangered Species Statute, I recommend including them as target species for the survey. Additionally, I recommend adding Great Lakes Jacob's-ladder (*Polemonium lacustre*), a state-listed endangered species, and Garber's sedge (*Carex garberi*), a state-listed threatened species, as target species for the survey as preliminary information indicates that suitable habitat may exist in the project area.

Table 1 State-listed plant species that have been documented in the vicinity of the proposed project.

Common Name	Scientific Name	MN Status
Yellow Specklebelly Lichen	*Pseudocyphellaria holarctica*	Endangered
Wild Chives	*Allium schoenoprasum*	Endangered
Eastern Hemlock	*Tsuga canadensis*	Endangered
Pale Sedge	*Carex pallescens*	Endangered
Narrow Triangle Moonwort	*Botrychium angustisegmentum*	Threatened
Red Saltwort	*Salicornia rubra*	Threatened
Blunt-lobed Grapefern	*Sceptridium oneidense*	Threatened
Three-stamened Waterwort	*Elatine triandra*	Special Concern
Lapland Buttercup	*Ranunculus lapponicus*	Special Concern
Montane Yellow-eyed Grass	*Xyris montana*	Special Concern
Least Moonwort	*Botrychium simplex*	Special Concern
Torrey's Mannagrass	*Torreyochloa pallida*	Special Concern

Surveys must be conducted by a qualified surveyor and follow the standards contained in the Rare Species Survey Process and Rare Plant Guidance. Visit the Natural Heritage Review page for a list of certified surveyors and more information on this process. Please note that the survey needs to be conducted by an individual with demonstrated experience surveying *Botrychium/Sceptridium* species and lichens. Survey proposals should be submitted to Reports.NHIS@state.mn.us prior to initiating survey work. Project planning should take into account that any botanical survey needs to be conducted

during the appropriate time of the year, which may be limited. Please consult Review.NHIS@state.mn.us if you have any questions regarding this process.

- Blanding's turtles (*Emydoidea blandingii*) and wood turtles (*Glyptemys insculpta*), both state-listed threatened species, have been documented in the vicinity of the proposed project. Factors believed to contribute to the decline of these species include collisions with vehicles, fragmentation, habitat destruction, and collection for pet trade. Any added mortality can be detrimental to populations, as these turtles have a low reproduction rate that depends upon a high survival rate to maintain population levels.
    - Blanding's turtles use upland areas up to and over a mile distant from wetlands, waterbodies, and watercourses. Uplands are used for nesting, basking, periods of dormancy, and traveling between wetlands.
    - Wood turtles are found in fast-moving streams with sand or gravel substrates and with adjacent forests. They also use alder swamps, forest, or grassland habitat typically within a quarter-mile of streams for basking and foraging. Sandy, sparsely vegetated areas that are not prone to flooding and have ample exposure to direct sunlight provide important nesting sites.

The proposed project has the potential to impact these rare turtles through direct fatalities and habitat disturbance/destruction. Minnesota's Endangered Species Statute (Minnesota Statutes, section 84.0895) and associated Rules (Minnesota Rules, part 6212.1800 to 6212.2300 and 6134) prohibit the take of threatened or endangered species without a permit. **As such, please contact** Review.NHIS@state.mn.us **to confirm that the following measures will be implemented:**

- Avoid wetland and aquatic impacts during overwintering season, between September 15 and April 15, if the area is suitable for overwintering.
    - Wetlands and aquatic habitats that freeze solid to the bed (no liquid water) are not suitable overwintering habitat. However, turtles will overwinter in wetlands and aquatic habitat where ice has closed over the water's surface.
- Limit erosion and sediment control to wildlife friendly erosion control.
- Check bare ground within construction areas for turtles before the use of heavy equipment or any ground disturbance.
- The Blanding's turtle flyer must be given to all contractors working in the area.
- Report any sightings using the DNR Plant and Animal Observation Form.
    - Immediately notify Bridget Henning-Randa (Bridget.Henning-Randa@state.mn.us or 651-259-5073) for sightings of an injured, dead, or nesting turtle.
- If turtles are in imminent danger, move them by hand out of harm's way; otherwise, they are to be left undisturbed. Directions on how to move turtles safely can be found at Helping Turtles Across the Road.

If the above measures are not feasible, please contact Review.NHIS@state.mn.us as a project-specific avoidance plan will likely be needed to demonstrate avoidance.

Additional turtle avoidance measures may include, but are not limited to, the following recommendations:

- As illegal collection is a concern with these species, please do not post any signs that would bring attention to the presence of these turtles.
- Recommendations from List 1 and List 2 of the Blanding's turtle fact sheet.
- Avoid hydro-mulch products that contain any materials with synthetic (plastic) fiber additives, as the fibers can re-suspend and flow into waterbodies.
- Avoid disturbance to floodplain habitats as much as feasible, especially April through late September.
- Do not leave sand piles along river, as they may be used for nesting.
- Terrain should be left with as much natural contour as possible. Graded areas should be re-vegetated with native grasses and forbs. Use of fertilizers and pesticides should be avoided.
- Avoid or minimize using instream erosion and sediment control practices as turtles are mobile in streams and may get trapped.
- Avoid hydro-mulch products that contain any materials with synthetic (plastic) fiber additives, as the fibers can re-suspend and flow into waterbodies.

- Four-toed salamanders (*Hemidactylium scutatum*), a state-listed species of special concern, have been documented in the vicinity of the proposed project. Four-toed salamanders are typically found in small, isolated colonies. Adults generally inhabit mature hardwood forests associated with wetland depressions or small streams. They find shelter in the forest floor under leaf litter, woody debris, rocks, and moss. Females lay eggs in sphagnum moss hummocks, in shallow wetlands, or stream-side pools where hatchlings move into the water after emerging from the egg. The greatest threat to four-toed salamanders is loss and degradation of upland forest habitat and the loss of wetlands, which are used as nesting sites. **Please see the "Forest Management Guidelines for the Protection of Four-toed and Spotted Salamander Populations" for recommendations to minimize adverse impacts to these rare species.** Although these guidelines were written for DNR Forestry staff, we strongly encourage you to consider adopting relevant measures for your project. Please use your NHIS License Agreement to identify avoidance areas for four-toed salamanders.

- Big brown bats (*Eptesicus fuscus*), a state-listed species of special concern, have been documented in the vicinity of the proposed project. During the active season (approximately April-November) bats roost underneath bark, in cavities, or in crevices of both live and dead trees. Tree removal can negatively impact bats by destroying roosting habitat, especially during the pup rearing season when females are forming maternity roosting colonies and the pups cannot yet fly. To minimize these impacts, **the DNR recommends that tree removal be avoided from June 1 through August 15.**

- American goshawk (*Astur atricapillus*), a state-listed bird species of special concern, has been documented in the vicinity of the proposed project. This species is found in large, older upland forests systems. They are impacted by fragmentation, loss of forest diversity, and decrease in mature trees. **Trees should be inspected for nests prior to being cut down.** Please contact the Regional Nongame Specialist, Gaea Crozier (gaea.e.crozier@state.mn.us or 218-328-8811), if any nests are discovered.

- Trumpeter swans (*Cygnus buccinator*), a state-listed species of special concern, have been documented nesting in the vicinity of the proposed project. During the breeding season, trumpeter swans select small ponds and lakes with extensive beds of cattails, bulrush, sedges, and/or horsetail. Ideal habitat includes about 100 m of open water for take-off, stable levels of unpolluted water, emergent vegetation, low levels of human disturbance, and the presence of muskrat (*Ondatra zibethicus*) houses and American beaver (*Castor canadensis*) lodges for use as nesting platforms. If any of the wetlands on site provide suitable habitat, swans may choose to nest in these wetlands. **The DNR recommends avoiding construction activities during the nesting season, late April through early June, near suitable nesting habitat.**

- Creek heelsplitter (*Lasmigona compressa*) and black sandshell (*Ligumia recta*), both state-listed mussel species of special concern, have been documented in the several rivers in the vicinity of the proposed project. No state-listed mussels have been observed in the waterbodies identified for the six new water crossings, but these waterbodies connect to rivers where state-listed mussels are present. Mussels are particularly vulnerable to deterioration in water quality, especially increased siltation. Therefore, **it is important that effective erosion prevention and sediment control practices are maintained throughout the duration of the project to prevent adverse debris and material from impacting downstream populations.**

- Please visit the DNR Rare Species Guide for more information on the habitat use of state-listed species and recommended measures to avoid or minimize impacts.

- Please report incidental sightings of state-listed species via the DNR Plant and Animal Observation Form.

Federally Protected Species

- To ensure compliance with federal law, conduct a federal regulatory review using the U.S. Fish and Wildlife Service's (USFWS) online Information for Planning and Consultation (IPaC) tool.

- Canada lynx (*Lynx canadensis*), federally listed as threatened and a state-listed species of special concern, has been documented in the vicinity of the proposed project. This species is found in large tracts of boreal and mixed conifer-hardwood forest where they are highly dependent on snowshoe hare for prey. For additional information on this species, review the USFWS Canada Lynx Species Page.

Environmental Review and Permitting

- Please include a copy of this letter and the MCE-generated Final Project Report in any state or local license or permit application. Please note that measures to avoid or minimize disturbance to the above rare features may be included as restrictions or conditions in any required permits or licenses.

- The Environmental Assessment Worksheet (EAW) should address whether the proposed project has the potential to adversely affect the above rare features and, if so, it should identify specific measures that will be taken to avoid or minimize disturbance. Sufficient information should be provided so the DNR can determine whether a permit to take will be needed for any of the above protected species.

The Natural Heritage Information System (NHIS), a collection of databases that contains information about Minnesota's rare natural features, is maintained by the Division of Ecological and Water Resources, Department of Natural Resources. The NHIS is continually updated as new information becomes available and is the most complete source of data on Minnesota's native plant communities, rare species, and other rare features. However, the NHIS is not an exhaustive inventory and does not contain the locations of all rare features in the state. Therefore, ecologically significant features for which we have no records may exist within the project area. If additional information becomes available regarding rare features in the vicinity of the project, further review may be necessary.

For environmental review purposes, the results of this Natural Heritage Review are valid for one year; the results are only valid for the project location and project description provided with the request. **If project details change or the project has not occurred within one year, please resubmit the project for review within one year of initiating project activities.** Resubmit by selecting *Clone Project as Draft* on the project page in MCE.

The Natural Heritage Review does not constitute project approval by the Department of Natural Resources. Instead, it identifies issues regarding known occurrences of rare features and potential impacts to these rare features. Visit Natural Heritage Review for additional information regarding this process, survey guidance, and other related information. For information on the environmental review process or other natural resource concerns, please contact your DNR Regional Environmental Assessment Ecologist.

Thank you for consulting us and for your interest in the conservation of Minnesota's rare natural resources.

Sincerely,

Molly Barrett

Digitally signed by Molly Barrett
Date: 2026.08.26 13:16:28 -05'00'

Natural Heritage Review Specialist
molly.barrett@state.mn.us

Cc: Jessica Parson, Regional Environmental Assessment Ecologist, Northeast (Region 2)
Cc: Karen Updegraff, Regional Plant Ecologist, Northeast (Region 2)
Cc: Ryan T. Anderson, Assistant Plant Ecologist, Northeast (Region 2)
Cc: Jennie Skancke, Wetlands Program Coordinator

For more project details, see the MCE-generated Final Project Report, available on the MCE project page.

Twig Area Trail Riders Trail Improvements: Clone Of 2025-00462

USA Topo Basemap with Locator Map

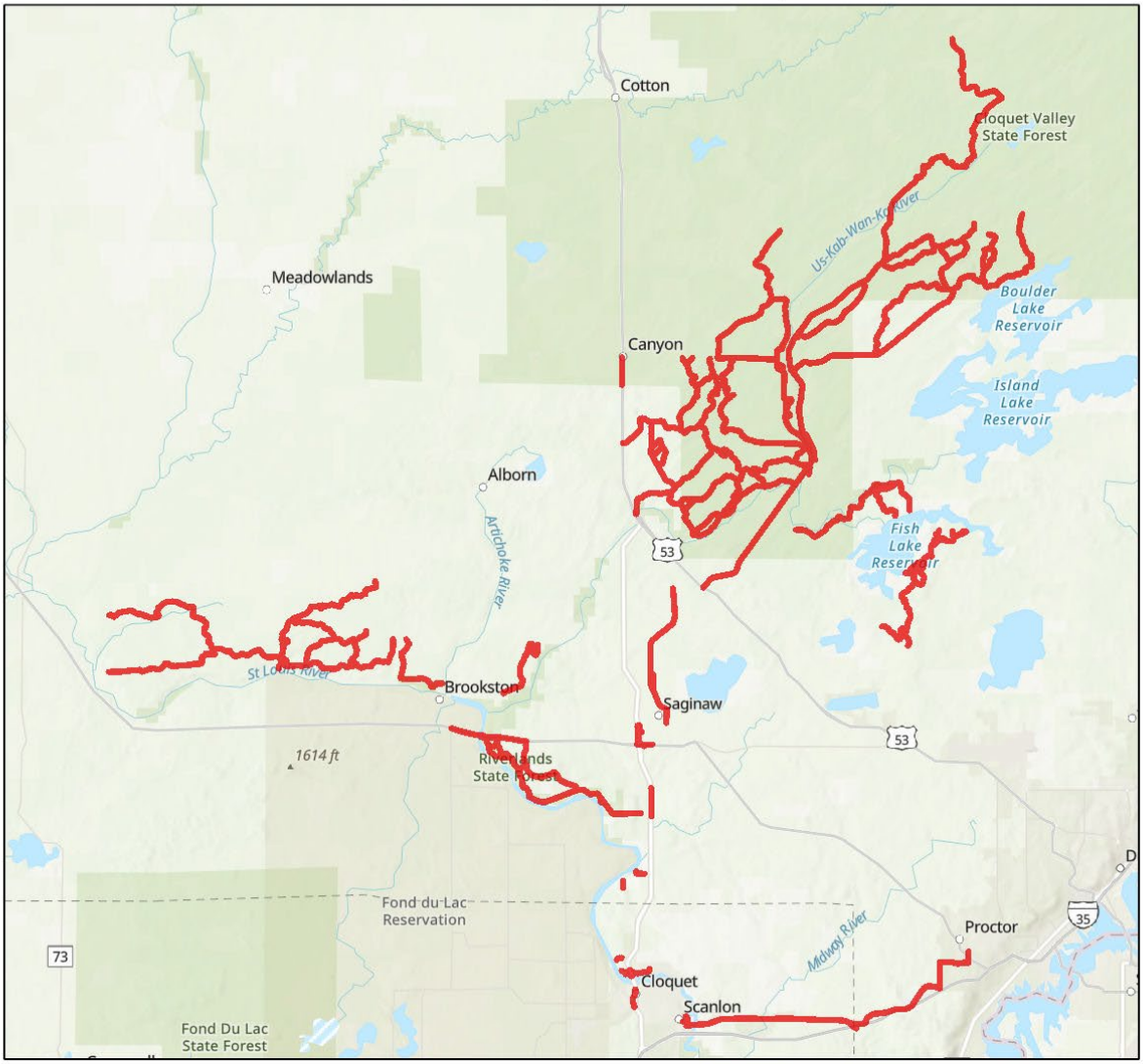

N
W E
S

0 2.25 4.5 9 13.5 18 Miles

Project Boundary

Project Type: Trails, OHV

Project Size (acres): 733.39

County(s): Carlton, St. Louis

TRS: T49 R15 S10, T49 R15 S11, T49 R15 S14, T49 R15 S15, T49 R15 S16 +

Esri, TomTom, Garmin, FAO, NOAA, USGS, EPA, USFWS
Esri, CGIAR, USGS
St. Louis County (MN), MN Dept Natural Resources, Esri, TomTom, Garmin,

Conservation Planning Report: 2025-00462-02

This document is intended for planning purposes only for the area of interest defined by the user. The report identifies ecologically significant areas documented within the defined area of interest plus any additional search distance indicated below. These ecologically significant areas can be viewed in the Explore Tab of the Minnesota Conservation Explorer. Please visit MN Geospatial Commons for downloadable GIS data.

This document does not meet the criteria for a Natural Heritage Review. If a Natural Heritage Review is needed, please define an Area of Interest in the Explore Tab and click on the Natural Heritage Review option.

This document does not include known occurrences of state-listed or federally listed species.

MBS Sites of Biodiversity Significance

Search distance = 330 feet

Minnesota Biological Survey (MBS) Sites of Biodiversity Significance are areas with varying levels of native biodiversity that may contain high quality native plant communities, rare plants, rare animals, and/or animal aggregations. A Biodiversity Significance Rank is assigned on the basis of the number of rare species, the quality of the native plant communities, size of the site, and context within the landscape. MBS Sites are ranked Outstanding, High, or Moderate. Areas ranked as Below were found to be disturbed and are retained in the layer as negative data. These areas do not meet the minimum biodiversity threshold for statewide significance but may have conservation value at the local level as habitat for native plants and animals, corridors for animal movements, buffers surrounding higher quality natural areas, or as areas with high potential for restoration of native habitat. The DNR recommends avoidance of MBS Sites of Biodiversity Significance ranked High or Outstanding.

Wetlands within MBS Sites of Outstanding or High Biodiversity Significance may be considered Rare Natural Communities under the Wetland Conservation Act. For technical guidance on Rare Natural Communities, please visit WCA Program Guidance and Information.

For more information please visit MBS Sites of Biodiversity Significance.

The following MBS Sites of Biodiversity Significance are within the search area:

MBS Site Name	Biodiversity Significance	Status
Arlberg Bog	High	final
Bergen Lake	Moderate	final
Boulder Lake North Shore	Below	final
Boulder Lake Reservoir	High	final
Brevator woods	Moderate	final
Chicken-Hellwig Headwaters	Moderate	final
Chicken Creek Hardwoods	High	final
Cloquet River Side Lake	Moderate	final
Fish Lake Reservoir	Moderate	final
Grand Lake Swamp	Moderate	final
Industrial Peatland	Moderate	final
Lost Lake Hardwoods	High	final
McCarty River	Moderate	preliminary
Pine Island floodplain forest	Moderate	final
St Louis River - Brookston	Moderate	preliminary

MBS Site Name	Biodiversity Significance	Status
Stroud Lake	High	final
Third Lake	Moderate	final
Thomson wetlands	Moderate	final
Three Lakes Peatlands - East	Moderate	preliminary
Twin Lakes Hardwoods	Outstanding	final
Upper Uskabwanka	Moderate	final
Wild Rice Lake-Canosia Wetlands	Moderate	final

DNR Native Plant Communities

Search distance = 330 feet

A native plant community is a group of native plants that interact with each other and with their environment in ways not greatly altered by modern human activity or by introduced organisms. These groups of native plant species form recognizable units, such as oak savannas, pine forests, or marshes, that tend to repeat over space and time. Native plant communities are classified and described by considering vegetation, hydrology, landforms, soils, and natural disturbance regimes.

DNR Native Plant Community types and subtypes are given a Conservation Status Rank that reflects the relative rarity and endangerment of the community type in Minnesota. Conservation Status Ranks range from S1 (critically imperiled) to S5 (secure, common, widespread, and abundant). Native plant communities with a Conservation Status Rank of S1 through S3 are considered rare in the state. The DNR recommends avoidance of rare native plant communities.

Wetland native plant communities with a conservation status rank of S1 through S3 may also be considered Rare Natural Communities under the Wetland Conservation Act. For technical guidance on Rare Natural Communities, please visit WCA Program Guidance and Information.

DNR Native Plant Communities may be given a Condition Rank that reflects the degree of ecological integrity of a specific occurrence of a native plant community. The Condition Rank is based on species composition, vegetation structure, ecological processes and functions, level of human disturbance, presence of exotic species, and other factors. Condition Ranks range from A-rank (excellent ecological integrity) to D-rank (poor ecological integrity. A Condition Rank of NR means Not Ranked and a Condition Rank of MULTI mean multiple ranks are present because the record is a native plant community complex.

For more information please visit Minnesota's Native Plant Communities.

The following DNR Native Plant Communities are within the search area:

MBS Site Name	NPC Code	Native Plant Community Classification	Conservation Status Rank	Number of Communities
Arlberg Bog	APn80a	Black Spruce Bog	S4	4
Arlberg Bog	APn81	Northern Poor Conifer Swamp	(S4, S5)	8
Arlberg Bog	APn90a	Low Shrub Bog	S4S5	1
Arlberg Bog	APn91a	Low Shrub Poor Fen	S5	2
Arlberg Bog	BW_CX	Beaver Wetland Complex	(S2, S3, S4, S5)	1
Arlberg Bog	FPn73	Northern Rich Alder Swamp	(S5)	1
Arlberg Bog	FPn73a	Alder - (Maple - Loosestrife) Swamp	S5	18
Arlberg Bog	FPn82	Northern Rich Tamarack Swamp (Western Basin)	(S4, S5)	2
Arlberg Bog	MHn35	Northern Mesic Hardwood Forest	(S4)	13
Arlberg Bog	MHn35a	Aspen - Birch - Basswood Forest	S4	1
Arlberg Bog	MHn35b	Red Oak - Sugar Maple - Basswood - (Bluebead Lily) Forest	S4	3
Arlberg Bog	MHn44	Northern Wet-Mesic Boreal Hardwood-Conifer Forest	(S2, S3, S3S4, S4)	10
Arlberg Bog	MHn44c	Aspen - Fir Forest	S3S4	1

MBS Site Name	NPC Code	Native Plant Community Classification	Conservation Status Rank	Number of Communities
Arlberg Bog	WMn82a	Willow - Dogwood Shrub Swamp	S5	1
Brevator woods	APn81	Northern Poor Conifer Swamp	(S4, S5)	1
Brevator woods	BW_CX	Beaver Wetland Complex	(S2, S3, S4, S5)	1
Brevator woods	FDn33	Northern Dry-Mesic Mixed Woodland	(S2, S3, S5)	1
Brevator woods	FDn43	Northern Mesic Mixed Forest	(S2, S3, S5)	1
Brevator woods	FFn57	Northern Terrace Forest	(S3)	3
Brevator woods	FFn67	Northern Floodplain Forest	(S3)	1
Brevator woods	FPn73	Northern Rich Alder Swamp	(S5)	3
Brevator woods	MHn35	Northern Mesic Hardwood Forest	(S4)	1
Brevator woods	MHn44	Northern Wet-Mesic Boreal Hardwood-Conifer Forest	(S2, S3, S3S4, S4)	3
Brevator woods	MHn46	Northern Wet-Mesic Hardwood Forest	(S4)	1
Brevator woods	OPn81	Northern Shrub Shore Fen	(S5)	1
Brevator woods	OPn92	Northern Rich Fen (Basin)	(S4)	3
Brevator woods	RVx32	Sand/Gravel/Cobble River Shore	(S3, S4)	1
Brevator woods	WFn55	Northern Wet Ash Swamp	(S3, S4)	5
Brevator woods	WFn64	Northern Very Wet Ash Swamp	(S4)	3
Brevator woods	WFn74	Northern Wet Alder Swamp	(S3)	1
Chicken-Hellwig Headwaters	APn81	Northern Poor Conifer Swamp	(S4, S5)	2
Chicken-Hellwig Headwaters	APn90	Northern Open Bog	(S2, S4, S4S5) (S2, S4, S4S5) (S2, S4, S4S5)	1
Chicken-Hellwig Headwaters	FPn73	Northern Rich Alder Swamp	(S5)	1
Chicken-Hellwig Headwaters	MHn44	Northern Wet-Mesic Boreal Hardwood-Conifer Forest	(S2, S3, S3S4, S4)	2
Chicken Creek Hardwoods	AFP_CX	Alder Swamp / Forested Peatland Complex	(S3, S4, S5)	1
Chicken Creek Hardwoods	APn80a	Black Spruce Bog	S4	1
Chicken Creek Hardwoods	APn81a	Poor Black Spruce Swamp	S5	1
Chicken Creek Hardwoods	APn81b	Poor Tamarack - Black Spruce Swamp	S4	1
Chicken Creek Hardwoods	BW_CX	Beaver Wetland Complex	(S2, S3, S4, S5)	1
Chicken Creek Hardwoods	FDn43b1	Aspen - Birch Forest, Balsam Fir Subtype	S5	3
Chicken Creek Hardwoods	FDn43c	Upland White Cedar Forest	S3	1
Chicken Creek Hardwoods	FPn62a	Rich Black Spruce Swamp (Basin)	S3	1
Chicken Creek Hardwoods	MHn44	Northern Wet-Mesic Boreal Hardwood-Conifer Forest	(S2, S3, S3S4, S4)	2
Chicken Creek Hardwoods	MHn44c	Aspen - Fir Forest	S3S4	1
Chicken Creek Hardwoods	MHn45	Northern Mesic Hardwood (Cedar) Forest	(S2, S3, S4)	4
Chicken Creek Hardwoods	MHn45a	Paper Birch - Sugar Maple Forest (North Shore)	S4	2
Chicken Creek Hardwoods	MHn45b	White Cedar - Yellow Birch Forest	S2	2
Chicken Creek Hardwoods	MHn46	Northern Wet-Mesic Hardwood Forest	(S4)	2
Chicken Creek Hardwoods	WFn53	Northern Wet Cedar Forest	(S3, S4)	2
Chicken Creek Hardwoods	WFn55	Northern Wet Ash Swamp	(S3, S4)	4
Chicken Creek Hardwoods	WFn55c	Black Ash - Mountain Maple Swamp (Northern)	S4	1
Chicken Creek Hardwoods	WFn64	Northern Very Wet Ash Swamp	(S4)	4
Lost Lake Hardwoods	AFP_CX	Alder Swamp / Forested Peatland Complex	(S3, S4, S5)	1
Lost Lake Hardwoods	APn81	Northern Poor Conifer Swamp	(S4, S5)	1
Lost Lake Hardwoods	APn81a	Poor Black Spruce Swamp	S5	1
Lost Lake Hardwoods	APn81b	Poor Tamarack - Black Spruce Swamp	S4	3
Lost Lake Hardwoods	APn91	Northern Poor Fen	(S3, S4, S5)	2

MBS Site Name	NPC Code	Native Plant Community Classification	Conservation Status Rank	Number of Communities
Lost Lake Hardwoods	APn91a	Low Shrub Poor Fen	S5	1
Lost Lake Hardwoods	BW_CX	Beaver Wetland Complex	(S2, S3, S4, S5)	3
Lost Lake Hardwoods	FDn43b1	Aspen - Birch Forest, Balsam Fir Subtype	S5	8
Lost Lake Hardwoods	FPn73a	Alder - (Maple - Loosestrife) Swamp	S5	2
Lost Lake Hardwoods	FPn82a	Rich Tamarack - (Alder) Swamp	S5	2
Lost Lake Hardwoods	MHn44	Northern Wet-Mesic Boreal Hardwood-Conifer Forest	(S2, S3, S3S4, S4)	2
Lost Lake Hardwoods	MHn45a	Paper Birch - Sugar Maple Forest (North Shore)	S4	2
Lost Lake Hardwoods	MHn47a	Sugar Maple - Basswood - (Bluebead Lily) Forest	S3	5
Lost Lake Hardwoods	WMn82b	Sedge Meadow	S4 or S5	1
Stroud Lake	AFP_CX	Alder Swamp / Forested Peatland Complex	(S3, S4, S5)	2
Stroud Lake	APn80a	Black Spruce Bog	S4	5
Stroud Lake	APn81a	Poor Black Spruce Swamp	S5	3
Stroud Lake	APn81b	Poor Tamarack - Black Spruce Swamp	S4	2
Stroud Lake	BW_CX	Beaver Wetland Complex	(S2, S3, S4, S5)	4
Stroud Lake	FDn43b1	Aspen - Birch Forest, Balsam Fir Subtype	S5	16
Stroud Lake	FPn62a	Rich Black Spruce Swamp (Basin)	S3	1
Stroud Lake	FPn63a	White Cedar Swamp (Northeastern)	S4	3
Stroud Lake	MHn44	Northern Wet-Mesic Boreal Hardwood-Conifer Forest	(S2, S3, S3S4, S4)	1
Stroud Lake	MHn44a	Aspen - Birch - Red Maple Forest	S4	1
Stroud Lake	MHn45	Northern Mesic Hardwood (Cedar) Forest	(S2, S3, S4)	3
Stroud Lake	WFn53	Northern Wet Cedar Forest	(S3, S4)	2
Stroud Lake	WFn55	Northern Wet Ash Swamp	(S3, S4)	1
Stroud Lake	WFn55a	Black Ash - Aspen - Balsam Poplar Swamp (Northeastern)	S4	2
Stroud Lake	WFn64	Northern Very Wet Ash Swamp	(S4)	3
Stroud Lake	WMn82b	Sedge Meadow	S4 or S5	1
Twin Lakes Hardwoods	AFP_CX	Alder Swamp / Forested Peatland Complex	(S3, S4, S5)	1
Twin Lakes Hardwoods	APn81a	Poor Black Spruce Swamp	S5	2
Twin Lakes Hardwoods	BW_CX	Beaver Wetland Complex	(S2, S3, S4, S5)	1
Twin Lakes Hardwoods	FDn43	Northern Mesic Mixed Forest	(S2, S3, S5)	1
Twin Lakes Hardwoods	FDn43b1	Aspen - Birch Forest, Balsam Fir Subtype	S5	1
Twin Lakes Hardwoods	FDn43c	Upland White Cedar Forest	S3	1
Twin Lakes Hardwoods	MHn44	Northern Wet-Mesic Boreal Hardwood-Conifer Forest	(S2, S3, S3S4, S4)	1
Twin Lakes Hardwoods	MHn45	Northern Mesic Hardwood (Cedar) Forest	(S2, S3, S4)	5
Twin Lakes Hardwoods	MHn45b	White Cedar - Yellow Birch Forest	S2	4
Twin Lakes Hardwoods	MHn45c	Sugar Maple Forest (North Shore)	S3	1
Twin Lakes Hardwoods	MHn46	Northern Wet-Mesic Hardwood Forest	(S4)	1
Twin Lakes Hardwoods	MHn47a	Sugar Maple - Basswood - (Bluebead Lily) Forest	S3	2
Twin Lakes Hardwoods	WFn53	Northern Wet Cedar Forest	(S3, S4)	1
Twin Lakes Hardwoods	WFn55	Northern Wet Ash Swamp	(S3, S4)	2
Twin Lakes Hardwoods	WMn82a	Willow - Dogwood Shrub Swamp	S5	1
Not Within MBS Site	APn91	Northern Poor Fen	(S3, S4, S5)	1
Not Within MBS Site	BW_CX	Beaver Wetland Complex	(S2, S3, S4, S5)	2
Not Within MBS Site	FDn33	Northern Dry-Mesic Mixed Woodland	(S2, S3, S5)	1

MBS Site Name	NPC Code	Native Plant Community Classification	Conservation Status Rank	Number of Communities
Not Within MBS Site	FDn43	Northern Mesic Mixed Forest	(S2, S3, S5)	11
Not Within MBS Site	FFn57	Northern Terrace Forest	(S3)	2
Not Within MBS Site	FPn73	Northern Rich Alder Swamp	(S5)	4
Not Within MBS Site	MHn44	Northern Wet-Mesic Boreal Hardwood-Conifer Forest	(S2, S3, S3S4, S4)	5
Not Within MBS Site	OPn92	Northern Rich Fen (Basin)	(S4)	2
Not Within MBS Site	WFn53	Northern Wet Cedar Forest	(S3, S4)	2
Not Within MBS Site	WFn55	Northern Wet Ash Swamp	(S3, S4)	4
Not Within MBS Site	WFn55a	Black Ash - Aspen - Balsam Poplar Swamp (Northeastern)	S4	1
Not Within MBS Site	WFn64	Northern Very Wet Ash Swamp	(S4)	2

Calcareous Fens

Search distance = 5 miles

A calcareous fen is a rare and distinctive peat-accumulating wetland that is legally protected in Minnesota under the Wetland Conservation Act (*Minnesota Statutes*, section 103G.223). Many of the unique characteristics of calcareous fens result from the upwelling of groundwater through calcareous substrates. Because of this dependence on groundwater hydrology, calcareous fens can be affected by nearby activities or even those several miles away. For more information regarding calcareous fens, please see the Calcareous Fen Fact Sheet or review the List of Known Calcareous Fens.

SEARCH RESULTS: No features were found within the search area.

DNR Old Growth Stands

Search distance = 330 feet

Old-growth forests are natural forests that have developed over a long period of time, generally at least 120 years, without experiencing severe, stand-replacing disturbances such as fires, windstorms, or logging. Old-growth forests are a unique, nearly vanished piece of Minnesota's history and ecology; less than 4% of Minnesota's old-growth forests remain. The DNR recommends avoidance of all DNR Old Growth Stands. The following DNR Old Growth Stands have been documented within the search area.

The following DNR Old Growth Stands are within the search area:

Stand Key	Current Age	Label
467460	99	67460 NH54
466982	169	66982 BSL42
467496	129	67496 NH56

MN Prairie Conservation Plan

Search distance = 330 feet

The Minnesota Prairie Conservation Plan, a twenty-five year strategy for accelerating prairie conservation in the state, identifies Core Areas, Corridors, and Corridor Complexes as areas to focus conservation efforts. The Plan's strategies include protection, enhancement, and restoration of grassland and wetland habitat. To meet the Plan's goals, approaches within Core Areas will need to include restoration and approaches within Corridors will need to include conservation of grassland habitat which can provide stepping stones between larger Core Areas.

SEARCH RESULTS: No features were found within the search area.

Important Bird Areas

Search distance = 1 mile

Important Bird Areas, identified by the Audubon Society in partnership with the DNR, are part of an international conservation effort aimed at conserving globally important bird habitats. They are voluntary and non-regulatory, but the designation demonstrates the significant ecological value of the area.

The following Important Birds Areas are within the search area:

- Sax-Zim Bog IBA

Lakes of Biological Significance

Search distance = 330 feet

Lakes of Biological Significance are high quality lakes as determined by the aquatic plant, fish, bird, or amphibian communities present within the lake. To be included in this layer, a lake only needs to meet the criteria for one of these four community types. The lake is assigned a biological significance of Outstanding, High, or Moderate based on the community with the highest quality.

The following Lakes of Biological Significance are within the search area:

Public Water Basin Name	Biological Significance	Plant Rank	Fish Rank	Amphibian Rank	Bird Rank
Fish Lake Flowage	Outstanding	3	1		2

USFWS Habitat Conservation Plans

A Habitat Conservation Plan (HCP) is a mechanism for compliance with the federal Endangered Species Act for a given set of activities and protected species. An HCP is required by the U.S. Fish and Wildlife Service (USFWS) as part of an application for an incidental take permit (ITP). The ITP allows the permit holder to proceed with activities covered in the HCP that could result in the unintentional take of federally listed species.

Lakes States Forest Management Bat Habitat Conservation Plan (Bat HCP): (search distance = 0; within area of interest only) This HCP was created to provide flexibility to the Minnesota Department of Natural Resources (DNR) to manage forests while addressing federal Endangered Species Act (ESA) regulations related to federally threatened and endangered bat species. The Bat HCP covers three bat species within Minnesota: northern long-eared bat, little brown bat, and tricolored bat. This report is intended to help non-federal, non-DNR landowners evaluate their potential eligibility for the Landowner Enrollment Program of the Bat HCP (For DNR-administered land, DNR staff should refer to the Bat HCP Implementation Policy).

Landowner Enrollment Program – DNR's incidental take permit may be extended through the Landowner Enrollment Program (LEP) to eligible non-federal landowners who conduct forest management activities. Landowners may be eligible to enroll in the LEP if they are a county land administrator, own more than 10,000 acres, or own land that overlaps a Bat HCP feature. The results below indicate if the defined area of interest overlaps a Bat HCP feature. For more information on how to enroll in the LEP, please visit the Landowner Enrollment Program (LEP).

SEARCH RESULTS: No Bat HCP features were found within the area of interest. Landowners are only eligible to apply for the Landowner Enrollment Program if they are a county land administrator or they own more than 10,000 acres.

USFWS Regulatory Layers

To ensure compliance with federal law, conduct a federal regulatory review using the U.S. Fish and Wildlife Service's (USFWS) online Information for Planning and Consultation (IPaC) tool. This report is not a substitution for a Section 7 review.

For informational purposes only, this tool currently checks the following USFWS Regulatory Layers:

Rusty Patched Bumblebee High Potential Zones: (*search distance = 0; within area of interest only*) The rusty patched bumble bee (*Bombus affinis*), federally listed as endangered, is likely to be present in suitable habitat within the high potential zones. From April through October this species uses underground nests in upland grasslands, shrublands, and forest edges, and forages where nectar and pollen are available. From October through April the species overwinters under tree litter in upland forests and woodlands. The rusty patched bumble bee may be impacted by a variety of land management activities including, but not limited to, prescribed fire, tree-removal, haying, grazing, herbicide use, pesticide use, land-clearing, soil disturbance or compaction, or use of non-native bees. The USFWS RPBB guidance provides guidance on avoiding impacts to rusty patched bumble bee and a key for determining if actions are likely to affect the species; the determination key can be found in the appendix. Please visit the USFWS Rusty Patched Bumble Bee Map for the most current locations of High Potential Zones.

SEARCH RESULTS: No features were found within the search area.

United States Department of the Interior

FISH AND WILDLIFE SERVICE
Minnesota-Wisconsin Ecological Services Field Office
3815 American Blvd East
Bloomington, MN 55425-1659
Phone: (952) 858-0793

In Reply Refer To: 06/04/2025 19:29:10 UTC
Project code: 2025-0102816
Project Name: Twig Area Trail Riders

Subject: Technical Assistance letter for 'Twig Area Trail Riders' for specified threatened and endangered species that may occur in your proposed project location consistent with the Minnesota-Wisconsin Endangered Species Determination Key (Minnesota-Wisconsin DKey).

Dear Ericka Massa:

The U.S. Fish and Wildlife Service (Service) received on **June 04, 2025** your effect determination(s) for the 'Twig Area Trail Riders' (Action) using the Minnesota-Wisconsin DKey within the Information for Planning and Consultation (IPaC) system. You have submitted this key to satisfy requirements under Section 7(a)(2). The Service developed this system in accordance of with the Endangered Species Act of 1973 (ESA) (87 Stat. 884, as amended; 16 U.S.C 1531 et seq.).

Based on your answers and the assistance of the Service's Minnesota-Wisconsin DKey, you made the following effect determination(s) for the proposed Action:

Species	**Listing Status**	**Determination**
Canada Lynx (*Lynx canadensis*)	Threatened	May affect
Gray Wolf (*Canis lupus*)	Threatened	NLAA
Monarch Butterfly (*Danaus plexippus*)	Proposed Threatened	No effect
Rufa Red Knot (*Calidris canutus rufa*)	Threatened	No effect

Critical Habitat	**Listing Status**	**Determination**
Canada Lynx (*Lynx canadensis*)	Final	May affect
Gray Wolf (*Canis lupus*)	Final	May affect

Determination Information

Coordination with the Service is not complete. Further coordination with the Minnesota-Wisconsin Ecological Services Field Office is recommended for those species with a determination of "May Affect," listed above. Please email our office at TwinCities@fws.gov and

attach a copy of this letter, so we can discuss methods to avoid or minimize potential adverse effects to those species.

Additional Information

Sufficient project details: Please provide sufficient project details on your project homepage in IPaC (Define Project, Project Description) to support your conclusions. Failure to disclose important aspects of your project that would influence the outcome of your effects determinations may negate your determinations and invalidate this letter. If you have site-specific information that leads you to believe a different determination is more appropriate for your project than what the Dkey concludes, you can and should proceed based on the best available information.

Future project changes: The Service recommends that you contact the Minnesota-Wisconsin Ecological Services Field Office or re-evaluate the project in IPaC if: 1) the scope or location of the proposed Action is changed; 2) new information reveals that the action may affect listed species or designated critical habitat in a manner or to an extent not previously considered; 3) the Action is modified in a manner that causes effects to listed species or designated critical habitat; or 4) a new species is listed or critical habitat designated. If any of the above conditions occurs, additional consultation with the Service should take place before project changes are final or resources committed.

For non-Federal representatives: Please note that when a project requires consultation under section 7 of the Act, the Service must consult directly with the Federal action agency unless that agency formally designates a non-Federal representative (50 CFR 402.08). Non-Federal representatives may prepare analyses or conduct informal consultations; however, the ultimate responsibility for section 7 compliance under the Act remains with the Federal agency. Please include the Federal action agency in additional correspondence regarding this project.

Species-specific information

Gray Wolf: Please notify the Service if there is observed gray wolf activity during project implementation that could indicate a den or rendezvous site in close proximity (e.g., multiple wolves observed).

Canada Lynx: Canada lynx may be present in the Action area. Projects have potential to affect lynx if they may harm the species directly (e.g., mammal trapping, poison bait, etc.), indirectly (e.g., removes more than 30 acres of forest; likely to significantly reduce snowshoe hare density over a 30-acre area), or change lynx habitat quality, quantity, or availability. **Please coordinate with the Minnesota-Wisconsin Ecological Services Field Office to further evaluate effects of the Action on Canada.**

Critical Habitat: You have indicated that your Action may affect a Critical Habitat. Adversely affecting Critical habitat of a threatened or endangered species can have adverse effects on the species itself. **Please coordinate with the Minnesota-Wisconsin Ecological Services Field Office to further evaluate effects of the Action on Critical Habitat.**

Bald and Golden Eagles: Bald eagles, golden eagles, and their nests are protected under the Bald and Golden Eagle Protection Act (54 Stat. 250, as amended, 16 U.S.C. 668a-d) (Eagle Act). The Eagle Act prohibits, except when authorized by an Eagle Act permit, the “taking” of bald

and golden eagles and defines “take” as “pursue, shoot, shoot at, poison, wound, kill, capture, trap, collect, molest or disturb.” The Eagle Act’s implementing regulations define disturb as “… to agitate or bother a bald or golden eagle to a degree that causes, or is likely to cause, based on the best scientific information available, (1) injury to an eagle, (2) a decrease in its productivity, by substantially interfering with normal breeding, feeding, or sheltering behavior, or (3) nest abandonment, by substantially interfering with normal breeding, feeding, or sheltering behavior.”

The following species and/or critical habitats may also occur in your project area and **are not** covered by this conclusion:

- Northern Long-eared Bat *Myotis septentrionalis* Endangered
- Suckley's Cuckoo Bumble Bee *Bombus suckleyi* Proposed Endangered
- Tricolored Bat *Perimyotis subflavus* Proposed Endangered

Coordination with the Service is not complete if additional coordination is advised above for any species.

Action Description
You provided to IPaC the following name and description for the subject Action.

1. Name

Twig Area Trail Riders

2. Description

The following description was provided for the project 'Twig Area Trail Riders':

> Trail improvements to support safe and sustainable use by ATVs.

The approximate location of the project can be viewed in Google Maps: https://www.google.com/maps/@46.730227400000004,-92.45628502030219,14z

QUALIFICATION INTERVIEW

1. This determination key is intended to assist the user in evaluating the effects of their actions on Federally listed species in Minnesota and Wisconsin. It does not cover other prohibited activities under the Endangered Species Act (e.g., for wildlife: import/export, Interstate or foreign commerce, possession of illegally taken wildlife, etc.; for plants: import/export, reduce to possession, malicious destruction on Federal lands, commercial sale, etc.) or other statutes. Additionally, this key DOES NOT cover wind development, purposeful take (e.g., for research or surveys), communication towers that have guy wires or are over 450 feet in height, aerial or other large-scale application of any chemical (such as insecticide or herbicide), and approval of long-term permits or plans (e.g., FERC licenses, HCP's).

   Click **YES** to acknowledge that you must consider other prohibitions of the ESA or other statutes outside of this determination key.

   Yes
2. Is the action being funded, authorized, or carried out by a Federal agency?

   No
3. Are you the Federal agency or designated non-federal representative?

   No
4. Does the action involve the installation or operation of wind turbines?

   No
5. Does the action involve purposeful take of a listed animal?

   No
6. Does the action involve a new communications tower?

   No
7. Does the activity involve aerial or other large-scale application of ANY chemical, including pesticides (insecticide, herbicide, fungicide, rodenticide, etc)?

   No
8. Will your action permanently affect local hydrology?

   No
9. Will your action temporarily affect local hydrology?

   No
10. Will your project have any direct impacts to a stream or river (e.g., Horizontal Directional Drilling (HDD), hydrostatic testing, stream/road crossings, new stormwater outfall discharge, dams, other in-stream work, etc.)?

    No

11. Does your project have the potential to impact the riparian zone or indirectly impact a stream/river (e.g., cut and fill; horizontal directional drilling; construction; vegetation removal; pesticide or fertilizer application; discharge; runoff of sediment or pollutants; increase in erosion, etc.)?

    Note: Consider all potential effects of the action, including those that may happen later in time and outside and downstream of the immediate area involved in the action.

    Endangered Species Act regulation defines "effects of the action" to include all consequences to listed species or critical habitat that are caused by the proposed action, including the consequences of other activities that are caused by the proposed action. A consequence is caused by the proposed action if it would not occur but for the proposed action and it is reasonably certain to occur. Effects of the action may occur later in time and may include consequences occurring outside the immediate area involved in the action. (50 CFR 402.02).

    Yes

12. Will your action disturb the ground or existing vegetation?

    Note: This includes any off-road vehicle access, soil compaction (enough to collapse a rodent burrow), digging, seismic survey, directional drilling, heavy equipment, grading, trenching, placement of fill, pesticide application (herbicide, fungicide), vegetation management (including removal or maintenance using equipment or prescribed fire), cultivation, development, etc.

    Yes

13. Will your action include spraying insecticides?

    No

14. Does your action area occur entirely within an already developed area?

    Note: Already developed areas are already paved, covered by existing structures, manicured lawns, industrial sites, or cultivated cropland, AND do not contain trees that could be roosting habitat. Be aware that listed species may occur in areas with natural, or semi-natural, vegetation immediately adjacent to existing utilities (e.g. roadways, railways) or within utility rights-of-way such as overhead transmission line corridors, and can utilize suitable trees, bridges, or culverts for roosting even in urban dominated landscapes (so these are not considered "already developed areas" for the purposes of this question). If unsure, select NO..

    No

15. Will the action occur during the red knot migration windows (May 15-June 15 or July 1-September 30?)

    No

16. Is there any potential for this action to harm Canada lynx directly (e.g., mammal trapping, poison bait, broadcasting disease control agents for wild animals, capturing animals for research projects, or regular human activity that may exclude lynx from forested habitat including blasting or explosives)?

    No

17. Is your action associated with the U.S. Forest Service?

    No

18. Is there any potential for this action to harm Canada lynx indirectly (e.g., increased traffic volume and speed that may result in vehicle strikes, regular human activity that may disturb or exclude lynx from forested habitat, blasting or explosives)?

    Yes

19. Is there any potential for the action to harm wolves directly (e.g., mammal trapping, poison bait), or indirectly (e.g., increasing vehicle use that may result in vehicle strikes, exposure to potential human persecution)?

    No

20. [Hidden Semantic] Does the action area intersect the Threatened gray wolf AOI?

    Automatically answered
    Yes

21. [Hidden Semantic] Does the action area intersect the WOLF CH?

    Automatically answered
    Yes

22. Will the action result in permanent changes to Gray Wolf habitat quality, quantity, or availability? (e.g. permanent conversion of forested habitat, new highways, etc.)

    Yes

23. [Hidden Semantic] Does the action area intersect the monarch butterfly species list area?

    Automatically answered
    Yes

24. Under the ESA, monarchs remain warranted but precluded by listing actions of higher priority. The monarch is a candidate for listing at this time. The Endangered Species Act does not establish protections or consultation requirements for candidate species. Some Federal and State agencies may have policy requirements to consider candidate species in planning. We encourage implementing measures that will remove or reduce threats to these species and possibly make listing unnecessary.

    If your project will have no effect on monarch butterflies (for example, if your project won't affect their habitat or individuals), then you can make a "no effect" determination for this project.

    Are you making a "no effect" determination for monarch?

    Yes

IPAC USER CONTACT INFORMATION

Agency: Private Entity
Name: Ericka Massa
Address: 418 W Superior St
City: Duluth
State: MN
Zip: 55802
Email emassa@sehinc.com
Phone: 2182592416

United States Department of the Interior

FISH AND WILDLIFE SERVICE
Minnesota-Wisconsin Ecological Services Field Office
3815 American Blvd East
Bloomington, MN 55425-1659
Phone: (952) 858-0793

In Reply Refer To: 06/04/2025 19:36:20 UTC
Project code: 2025-0102816
Project Name: Twig Area Trail Riders

Federal Nexus: no
Federal Action Agency (if applicable):

Subject: Technical assistance for 'Twig Area Trail Riders'

Dear Ericka Massa:

This letter records your determination using the Information for Planning and Consultation (IPaC) system provided to the U.S. Fish and Wildlife Service (Service) on June 04, 2025, for 'Twig Area Trail Riders' (here forward, Project). This project has been assigned Project Code 2025-0102816 and all future correspondence should clearly reference this number. **Please carefully review this letter. Your Endangered Species Act (Act) requirements may not bbe complete.**

Ensuring Accurate Determinations When Using IPaC

The Service developed the IPaC system and associated species' determination keys in accordance with the Endangered Species Act of 1973 (ESA; 87 Stat. 884, as amended; 16 U.S.C. 1531 et seq.) and based on a standing analysis. All information submitted by the Project proponent into IPaC must accurately represent the full scope and details of the Project.

Failure to accurately represent or implement the Project as detailed in IPaC or the Northern Long-eared Bat and Tricolored Bat Range-wide Determination Key (Dkey), invalidates this letter. ***Answers to certain questions in the DKey commit the project proponent to implementation of conservation measures that must be followed for the ESA determination to remain valid. Note that conservation measures for northern long-eared bat and tricolored bat may differ. If both bat species are present in the action area and the key suggests more conservative measures for one of the species for your project, the Project may need to apply the most conservative measures in order to avoid adverse effects. If unsure which conservation measures should be applied, please contact the appropriate Ecological Services Field Office***

Determination for the Northern Long-Eared Bat and Tricolored Bat

Based upon your IPaC submission and a standing analysis completed by the Service, your project has reached the following effect determination(s):

Species	Listing Status	Determination
Northern Long-eared Bat (*Myotis septentrionalis*)	Endangered	NLAA
Tricolored Bat (*Perimyotis subflavus*)	Proposed Endangered	NLAA

Federal agencies must consult with U.S. Fish and Wildlife Service under section 7(a)(2) of the Endangered Species Act (ESA) when an action *may affect* a listed species. Tricolored bat is proposed for listing as endangered under the ESA, but not yet listed. For actions that may affect a proposed species, agencies cannot consult, but they can *confer* under the authority of section 7(a)(4) of the ESA. Such conferences can follow the procedures for a consultation and be adopted as such if and when the proposed species is listed. Should the tricolored bat be listed, agencies must review projects that are not yet complete, or projects with ongoing effects within the tricolored bat range that previously received a NE or NLAA determination from the key to confirm that the determination is still accurate.

Other Species and Critical Habitat that May be Present in the Action Area

The IPaC-assisted determination key for the northern long-eared bat and tricolored bat does not apply to the following ESA-protected species and/or critical habitat that also may occur in your Action area:

- Canada Lynx *Lynx canadensis* Threatened
- Gray Wolf *Canis lupus* Threatened
- Monarch Butterfly *Danaus plexippus* Proposed Threatened
- Rufa Red Knot *Calidris canutus rufa* Threatened
- Suckley's Cuckoo Bumble Bee *Bombus suckleyi* Proposed Endangered

Critical Habitats:

- Canada Lynx Lynx canadensis Threatened
- Gray Wolf Canis lupus Threatened

You may coordinate with our Office to determine whether the Action may cause prohibited take of the animal species and/or critical habitat listed above. Note that if a new species is listed that may be affected by the identified action before it is complete, additional review is recommended to ensure compliance with the Endangered Species Act.

Next Steps

Coordination with the Service is complete. This letter serves as technical assistance. All conservation measures should be implemented as proposed. Thank you for considering federally listed species during your project planning.

If no changes occur with the Project or there are no updates on listed species, no further consultation/coordination for this project is required for the northern long-eared bat. However, the Service recommends that project proponents re-evaluate the Project in IPaC if: 1) the scope, timing, duration, or location of the Project changes (includes any project changes or amendments); 2) new information reveals the Project may impact (positively or negatively) federally listed species or designated critical habitat; or 3) a new species is listed, or critical habitat designated. If any of the above conditions occurs, additional coordination with the Service should take place before project implements any changes which are final or commits additional resources.

If you have any questions regarding this letter or need further assistance, please contact the Minnesota-Wisconsin Ecological Services Field Office and reference Project Code 2025-0102816 associated with this Project.

Action Description
You provided to IPaC the following name and description for the subject Action.

1. Name

Twig Area Trail Riders

2. Description

The following description was provided for the project 'Twig Area Trail Riders':

> Trail improvements to support safe and sustainable use by ATVs.

The approximate location of the project can be viewed in Google Maps: https://www.google.com/maps/@46.730227400000004,-92.45628502030219,14z

DETERMINATION KEY RESULT

Based on the answers provided, the proposed Action is consistent with a determination of “may affect, but not likely to adversely affect” for a least one species covered by this determination key.

QUALIFICATION INTERVIEW

1. Does the proposed project include, or is it reasonably certain to cause, intentional take of listed bats or any other listed species?

   Note: Intentional take is defined as take that is the intended result of a project. Intentional take could refer to research, direct species management, surveys, and/or studies that include intentional handling/encountering, harassment, collection, or capturing of any individual of a federally listed threatened, endangered or proposed species?

   No

2. Is the action area wholly within Zone 2 of the year-round active area for northern long-eared bat and/or tricolored bat?

   Automatically answered
   No

3. Does the action area intersect Zone 1 of the year-round active area for northern long-eared bat and/or tricolored bat?

   Automatically answered
   No

4. Does any component of the action involve leasing, construction or operation of wind turbines? Answer 'yes' if the activities considered are conducted with the intention of gathering survey information to inform the leasing, construction, or operation of wind turbines.

   Note: For federal actions, answer ‘yes’ if the construction or operation of wind power facilities is either (1) part of the federal action or (2) would not occur but for a federal agency action (federal permit, funding, etc.).

   No

5. Is the proposed action authorized, permitted, licensed, funded, or being carried out by a Federal agency in whole or in part?

   No

6. [Semantic] Is the action area located within 0.5 miles of a known bat hibernaculum? Note: The map queried for this question contains proprietary information and cannot be displayed. If you need additional information, please contact your State wildlife agency.

   Automatically answered
   No

7. Does the action area contain any winter roosts or caves (or associated sinkholes, fissures, or other karst features), mines, rocky outcroppings, or tunnels that could provide habitat for hibernating bats?

   No

8. Does the action area contain (1) talus or (2) anthropogenic or naturally formed rock shelters or crevices in rocky outcrops, rock faces or cliffs?

   No

9. Will the action cause effects to a bridge?

   Note: Covered bridges should be considered as bridges in this question.

   No

10. Will the action result in effects to a culvert or tunnel at any time of year?

    Yes

11. Does the culvert or tunnel equal or exceed 23 feet (7.0 meters) in length?

    No

12. Are trees present within 1000 feet of the action area?

    Note: If there are trees within the action area that are of a sufficient size to be potential roosts for bats answer "Yes". If unsure, additional information defining suitable summer habitat for the northern long-eared bat and tricolored bat can be found in Appendix A of the USFWS' Range-wide Indiana Bat and Northern long-eared bat Survey Guidelines at: https://www.fws.gov/media/range-wide-indiana-bat-and-northern-long-eared-bat-survey-guidelines.

    Yes

13. Does the action include the intentional exclusion of bats from a building or structure?

    Note: Exclusion is conducted to deny bats' entry or reentry into a building. To be effective and to avoid harming bats, it should be done according to established standards. If your action includes bat exclusion and you are unsure whether northern long-eared bats or tricolored bats are present, answer "Yes." Answer "No" if there are no signs of bat use in the building/structure. If unsure, contact your local Ecological Services Field Office to help assess whether northern long-eared bats or tricolored bats may be present. Contact a Nuisance Wildlife Control Operator (NWCO) for help in how to exclude bats from a structure safely without causing harm to the bats (to find a NWCO certified in bat standards, search the Internet using the search term "National Wildlife Control Operators Association bats"). Also see the White-Nose Syndrome Response Team's guide for bat control in structures.

    No

14. Does the action involve removal, modification, or maintenance of a human-made structure (barn, house, or other building) **known or suspected to contain roosting bats?**

    No

15. Will the action cause construction of one or more new roads open to the public?

    For federal actions, answer ‘yes’ when the construction or operation of these facilities is either (1) part of the federal action or (2) would not occur but for an action taken by a federal agency (federal permit, funding, etc.).

    No

16. Will the action include or cause any construction or other activity that is reasonably certain to increase average night-time traffic permanently or temporarily on one or more existing roads? **Note:** For federal actions, answer ‘yes’ when the construction or operation of these facilities is either (1) part of the federal action or (2) would not occur but for an action taken by a federal agency (federal permit, funding, etc.). .

    No

17. Will the action include or cause any construction or other activity that is reasonably certain to increase the number of travel lanes on an existing thoroughfare?

    For federal actions, answer ‘yes’ when the construction or operation of these facilities is either (1) part of the federal action or (2) would not occur but for an action taken by a federal agency (federal permit, funding, etc.).

    No

18. Will the proposed Action involve the creation of a new water-borne contaminant source (e.g., leachate pond, pits containing chemicals that are not NSF/ANSI 60 compliant)?

    Note: For information regarding NSF/ANSI 60 please visit https://www.nsf.org/knowledge-library/nsf-ansi-standard-60-drinking-water-treatment-chemicals-health-effects

    No

19. Will the proposed action involve the creation of a new point source discharge from a facility other than a water treatment plant or storm water system?

    No

20. Will the action include drilling or blasting?

    No

21. Will the action involve military training (e.g., smoke operations, obscurant operations, exploding munitions, artillery fire, range use, helicopter or fixed wing aircraft use)?

    No

22. Will the proposed action involve the use of herbicides or other pesticides other than herbicides (e.g., fungicides, insecticides, or rodenticides)?

    No

23. Will the action include or cause activities that are reasonably certain to cause chronic or intense nighttime noise (above current levels of ambient noise in the area) in suitable summer habitat for the northern long-eared bat or tricolored bat during the active season?

    Chronic noise is noise that is continuous or occurs repeatedly again and again for a long time. Sources of chronic or intense noise that could cause adverse effects to bats may include, but are not limited to: road traffic; trains; aircraft; industrial activities; gas compressor stations; loud music; crowds; oil and gas extraction; construction; and mining.

    Note: Additional information defining suitable summer habitat for the northern long-eared bat and tricolored bat can be found in Appendix A of the USFWS' Range-wide Indiana Bat and Northern long-eared bat Survey Guidelines at: https://www.fws.gov/media/range-wide-indiana-bat-and-northern-long-eared-bat-survey-guidelines.

    No

24. Does the action include, or is it reasonably certain to cause, the use of permanent or temporary artificial lighting within 1000 feet of suitable northern long-eared bat or tricolored bat roosting habitat?

    Note: Additional information defining suitable summer habitat for the northern long-eared bat and tricolored bat can be found in Appendix A of the USFWS' Range-wide Indiana Bat and Northern long-eared bat Survey Guidelines at: https://www.fws.gov/media/range-wide-indiana-bat-and-northern-long-eared-bat-survey-guidelines.

    No

25. Will the action include tree cutting or other means of knocking down or bringing down trees, tree topping, or tree trimming?

    Yes

26. Will the proposed action occur exclusively in an already established and currently maintained utility right-of-way?

    No

27. Does the action include emergency cutting or trimming of hazard trees in order to remove an imminent threat to human safety or property? See hazard tree note at the bottom of the key for text that will be added to response letters

    Note: A "hazard tree" is a tree that is an immediate threat to lives, public health and safety, or improved property.

    No

28. Does the project intersect with the 0- 9.9% forest density category?

    Automatically answered
    No

29. Does the project intersect with the 10.0- 19.9% forest density category map?

    Automatically answered
    No

30. Does the project intersect with the 20.0- 29.9% forest density category map?

    Automatically answered
    No

31. Does the project intersect with the 30.0- 100% forest density category map?

    Automatically answered
    Yes

32. Will the action cause trees to be cut, knocked down, or otherwise brought down across an area greater than 100 acres in total extent?

    No

33. Will the proposed action result in the use of prescribed fire?

    Note: If the prescribed fire action includes other activities than application of fire (e.g., tree cutting, fire line preparation) please consider impacts from those activities within the previous representative questions in the key. This set of questions only considers impacts from flame and smoke.

    No

34. Does the action area intersect the northern long-eared bat species list area?

    Automatically answered
    Yes

35. [Semantic] Is the action area located within 0.5 miles of radius of an entrance/opening to any known NLEB hibernacula? Note: The map queried for this question contains proprietary information and cannot be displayed. If you need additional information, please contact your State wildlife agency.

    Automatically answered
    No

36. [Semantic] Is the action area located within 0.25 miles of a culvert that is known to be occupied by northern long-eared or tricolored bats? **Note:** The map queried for this question contains proprietary information and cannot be displayed. If you need additional information, please contact your State wildlife agency.

    Automatically answered
    No

37. [Semantic] Is the action area located within 0.25 miles of a culvert that is known to be occupied by northern long-eared or tricolored bats?

    Automatically answered
    No

38. [Semantic] Is the action area located within 150 feet of a documented northern long-eared bat roost site?

    Note: The map queried for this question contains proprietary information and cannot be displayed. If you need additional information, please contact your State wildlife agency.Have you contacted the appropriate agency to determine if your action is within 150 feet of any documented northern long-eared bat roosts?

    Note: A document with links to Natural Heritage Inventory databases and other state-specific sources of information on the locations of northern long-eared bat roosts is available here. Location information for northern long-eared bat roosts is generally kept in state natural heritage inventory databases – the availability of this data varies by state. Many states provide online access to their data, either directly by providing maps or by providing the opportunity to make a data request. In some cases, to protect those resources, access to the information may be limited.

    Automatically answered
    No

39. Is suitable summer habitat for the northern long-eared bat present within 1000 feet of project activities?
    If unsure, answer "Yes."

    Note: Additional information defining suitable summer habitat for the northern long-eared bat and tricolored bat can be found in Appendix A of the USFWS' Range-wide Indiana Bat and Northern long-eared bat Survey Guidelines at: https://www.fws.gov/media/range-wide-indiana-bat-and-northern-long-eared-bat-survey-guidelines.

    Yes

40. Has a presence/probable absence summer bat survey targeting the northern long-eared bat following the Service's Range-wide Indiana Bat and Northern Long-Eared Bat Survey Guidelines been conducted within the project area?

    No

41. Are any of the trees proposed for cutting or other means of knocking down, bringing down, topping, or trimming suitable for northern long-eared bat roosting (i.e., live trees and/or snags ≥3 inches dbh that have exfoliating bark, cracks, crevices, and/or cavities)?

    Note: Additional information defining suitable summer habitat for the northern long-eared bat and tricolored bat can be found in Appendix A of the USFWS' Range-wide Indiana Bat and Northern long-eared bat Survey Guidelines at: https://www.fws.gov/media/range-wide-indiana-bat-and-northern-long-eared-bat-survey-guidelines.

    Yes

42. Will any tree cutting/trimming or other knocking or bringing down of trees occur during the **Summer Occupancy season** for northern long-eared bats in the action area? **Note:** Bat activity periods for your state can be found in Appendix L of the Service's Range-wide Indiana Bat and Northern long-eared Bat Survey Guidelines.

    No

43. Does the action area intersect the tricolored bat species list area?

    Automatically answered
    Yes

44. [Semantic] Is the action area located within 0.5 miles of radius of an entrance/opening to any known tricolored bat hibernacula? Note: The map queried for this question contains proprietary information and cannot be displayed. If you need additional information, please contact your State wildlife agency.

    Automatically answered
    No

45. [Semantic] Is the action area located within 0.25 miles of a culvert that is known to be occupied by northern long-eared or tricolored bats? **Note:** The map queried for this question contains proprietary information and cannot be displayed. If you need additional information, please contact your State wildlife agency.

    Automatically answered
    No

46. Has a presence/probable absence bat survey targeting the tricolored bat and following the Service's Range-wide Indiana Bat and Northern Long-Eared Bat Survey Guidelines been conducted within the project area?

    No

47. Is suitable summer habitat for the tricolored bat present within 1000 feet of project activities?
    (If unsure, answer ""Yes."")

    Note: If there are trees within the action area that may provide potential roosts for tricolored bats (e.g., clusters of leaves in live and dead deciduous trees, Spanish moss (Tillandsia usneoides), clusters of dead pine needles of large live pines) answer ""Yes."" For a complete definition of suitable summer habitat for the tricolored bat, please see Appendix A in the Service's Range-wide Indiana Bat and Northern long-eared Bat Survey Guidelines.

    Yes

48. Do any of the trees proposed for cutting or other means of knocking down, bringing down, topping, or trimming provide potential roosts for tricolored bats (e.g., clusters of leaves in live and dead deciduous trees, Spanish moss (*Tillandsia usneoides*), clusters of dead pine needles of large live pine trees)?

    Note: Additional information defining suitable summer habitat for the northern long-eared bat and tricolored bat can be found in Appendix A of the USFWS' Range-wide Indiana Bat and Northern long-eared bat Survey Guidelines at: https://www.fws.gov/media/range-wide-indiana-bat-and-northern-long-eared-bat-survey-guidelines.

    Yes

49. Will any tree cutting/trimming or other knocking or bringing down of trees be conducted during the Pup Season for tricolored bat?

    Note: Bat activity periods for your state can be found in Appendix L of the Service's Range-wide Indiana Bat and Northern long-eared Bat Survey Guidelines.

    No

50. Do you have any documents that you want to include with this submission?

    No

PROJECT QUESTIONNAIRE

Enter the extent of the action area (in acres) from which trees will be removed - round up to the nearest tenth of an acre. For this question, include the entire area where tree removal will take place, even if some live or dead trees will be left standing.

14.9

IPAC USER CONTACT INFORMATION

Agency: Private Entity
Name: Ericka Massa
Address: 418 W Superior St
City: Duluth
State: MN
Zip: 55802
Email emassa@sehinc.com
Phone: 2182592416

United States Department of the Interior

FISH AND WILDLIFE SERVICE
Minnesota-Wisconsin Ecological Services Field Office
3815 American Blvd East
Bloomington, MN 55425-1659
Phone: (952) 858-0793

In Reply Refer To: 05/29/2025 13:36:46 UTC
Project Code: 2025-0102816
Project Name: Twig Area Trail Riders

Subject: List of threatened and endangered species that may occur in your proposed project location or may be affected by your proposed project

To Whom It May Concern:

This response has been generated by the Information, Planning, and Conservation (IPaC) system to provide information on natural resources that could be affected by your project. The U.S. Fish and Wildlife Service (Service) provides this response under the authority of the Endangered Species Act of 1973 (16 U.S.C. 1531-1543), the Bald and Golden Eagle Protection Act (16 U.S.C. 668-668d), the Migratory Bird Treaty Act (16 U.S.C. 703-712), and the Fish and Wildlife Coordination Act (16 U.S.C. 661 *et seq.*).

Threatened and Endangered Species
The enclosed species list identifies threatened, endangered, proposed and candidate species, as well as proposed and final designated critical habitat, that may occur within the boundary of your proposed project and may be affected by your proposed project. The species list fulfills the requirement for obtaining a Technical Assistance Letter from the U.S. Fish and Wildlife Service under section 7(c) of the Endangered Species Act (Act) of 1973, as amended (16 U.S.C. 1531 *et seq.*).

New information based on updated surveys, changes in the abundance and distribution of species, changed habitat conditions, or other factors could change this list. Note that under 50 CFR 402.12(e) of the regulations implementing section 7 of the Act, the accuracy of this species list should be verified after 90 days. The Service recommends that verification be completed by visiting the IPaC website at regular intervals during project planning and implementation for updates to species lists and information. An updated list may be requested through the IPaC system by completing the same process used to receive the enclosed list.

Consultation Technical Assistance
Please refer to refer to our Section 7 website for guidance and technical assistance, including step-by-step instructions for making effects determinations for each species that might be present and for specific guidance on the following types of projects: projects in developed areas, HUD, CDBG, EDA, USDA Rural Development projects, pipelines, buried utilities, telecommunications, and requests for a Conditional Letter of Map Revision (CLOMR) from FEMA.

We recommend running the project (if it qualifies) through our **Minnesota-Wisconsin Federal Endangered Species Determination Key (Minnesota-Wisconsin ("D-key"))**. A demonstration video showing how-to access and use the determination key is available. Please note that the Minnesota-Wisconsin D-key is the third option of 3 available d-keys. D-keys are tools to help Federal agencies and other project proponents determine if their proposed action has the potential to adversely affect federally listed species and designated critical habitat. The Minnesota-Wisconsin D-key includes a structured set of questions that assists a project proponent in determining whether a proposed project qualifies for a certain predetermined consultation outcome for all federally listed species found in Minnesota and Wisconsin (except for the northern long-eared bat- see below), which includes determinations of “no effect” or “may affect, not likely to adversely affect." In each case, the Service has compiled and analyzed the best available information on the species’ biology and the impacts of certain activities to support these determinations.

If your completed d-key output letter shows a "No Effect" (NE) determination for all listed species, print your IPaC output letter for your files to document your compliance with the Endangered Species Act.

For Federal projects with a “Not Likely to Adversely Affect” (NLAA) determination, our concurrence becomes valid if you do not hear otherwise from us after a 30-day review period, as indicated in your letter.

If your d-key output letter indicates additional coordination with the Minnesota-Wisconsin Ecological Services Field Office is necessary (i.e., you get a “May Affect” determination), you will be provided additional guidance on contacting the Service to continue ESA coordination outside of the key; ESA compliance cannot be concluded using the key for “May Affect” determinations unless otherwise indicated in your output letter.

Note: Once you obtain your official species list, you are not required to continue in IPaC with d-keys, although in most cases these tools should expedite your review. If you choose to make an effects determination on your own, you may do so. If the project is a Federal Action, you may want to review our section 7 step-by-step instructions before making your determinations.

Using the IPaC Official Species List to Make No Effect and May Affect Determinations for Listed Species

1. If IPaC returns a result of “There are no listed species found within the vicinity of the project,” then project proponents can conclude the proposed activities will have **no effect** on any federally listed species under Service jurisdiction. Concurrence from the Service is not required for **no effect** determinations. No further consultation or coordination is required. Attach this letter to the dated IPaC species list report for your records.
2. If IPaC returns one or more federally listed, proposed, or candidate species as potentially present in the action area of the proposed project – other than bats (see below) – then project proponents must determine if proposed activities will have **no effect** on or **may affect** those species. For assistance in determining if suitable habitat for listed, candidate, or proposed species occurs within your project area or if species may be affected by project activities, you can obtain Life History Information for Listed and Candidate Species on our office website. If no impacts will occur to a species on the IPaC species list (e.g., there is no habitat present in the project area), the appropriate determination is **no effect**. No further consultation or coordination is required. Attach this letter to the dated IPaC species list report for your records.

3. Should you determine that project activities **may affect** any federally listed, please contact our office for further coordination. Letters with requests for consultation or correspondence about your project should include the Consultation Tracking Number in the header. Electronic submission is preferred.

Northern Long-Eared Bats
Northern long-eared bats occur throughout Minnesota and Wisconsin and the information below may help in determining if your project may affect these species.

Suitable summer habitat for northern long-eared bats consists of a wide variety of forested/wooded habitats where they roost, forage, and travel and may also include some adjacent and interspersed non-forested habitats such as emergent wetlands and adjacent edges of agricultural fields, old fields and pastures. This includes forests and woodlots containing potential roosts (i.e., live trees and/or snags ≥3 inches dbh for northern long-eared bat that have exfoliating bark, cracks, crevices, and/or hollows), as well as linear features such as fencerows, riparian forests, and other wooded corridors. These wooded areas may be dense or loose aggregates of trees with variable amounts of canopy closure. Individual trees may be considered suitable habitat when they exhibit the characteristics of a potential roost tree and are located within 1,000 feet (305 meters) of forested/wooded habitat. Northern long-eared bats have also been observed roosting in human-made structures, such as buildings, barns, bridges, and bat houses; therefore, these structures should also be considered potential summer habitat and evaluated for use by bats. If your project will impact caves or mines or will involve clearing forest or woodland habitat containing suitable roosting habitat, northern long-eared bats could be affected. For bat activity dates, please review Appendix L in the Range-wide Indiana Bat and Northern Long-Eared Bat Survey Guidelines.

Examples of unsuitable habitat include:

- Individual trees that are greater than 1,000 feet from forested or wooded areas,
- Trees found in highly developed urban areas (e.g., street trees, downtown areas),
- A pure stand of less than 3-inch dbh trees that are not mixed with larger trees, and
- A monoculture stand of shrubby vegetation with no potential roost trees.

If IPaC returns a result that northern long-eared bats are potentially present in the action area of the proposed project, project proponents can conclude the proposed activities **may affect** this species **IF** one or more of the following activities are proposed:

- Clearing or disturbing suitable roosting habitat, as defined above, at any time of year,
- Any activity in or near the entrance to a cave or mine,
- Mining, deep excavation, or underground work within 0.25 miles of a cave or mine,
- Construction of one or more wind turbines, or
- Demolition or reconstruction of human-made structures that are known to be used by bats based on observations of roosting bats, bats emerging at dusk, or guano deposits or stains.

If none of the above activities are proposed, project proponents can conclude the proposed activities will have **no effect** on the northern long-eared bat. Concurrence from the Service is not required for **No Effect** determinations. No further consultation or coordination is required. Attach this letter to the dated IPaC

species list report for your records.

If any of the above activities are proposed, and the northern long-eared bat appears on the user's species list, the federal project user will be directed to either the northern long-eared bat and tricolored bat range-wide D-key or the Federal Highways Administration, Federal Railways Administration, and Federal Transit Administration Indiana bat/Northern long-eared bat D-key, depending on the type of project and federal agency involvement. Similar to the Minnesota-Wisconsin D-key, these d-keys helps to determine if prohibited take might occur and, if not, will generate an automated verification letter. Additional information about available tools can be found on the Service's northern long-eared bat website.

Whooping Crane
Whooping crane is designated as a non-essential experimental population in Wisconsin and consultation under Section 7(a)(2) of the Endangered Species Act is only required if project activities will occur within a National Wildlife Refuge or National Park. If project activities are proposed on lands outside of a National Wildlife Refuge or National Park, then you are not required to consult. For additional information on this designation and consultation requirements, please review "Establishment of a Nonessential Experimental Population of Whooping Cranes in the Eastern United States."

Other Trust Resources and Activities
Bald and Golden Eagles - Although the bald eagle has been removed from the endangered species list, this species and the golden eagle are protected by the Bald and Golden Eagle Act and the Migratory Bird Treaty Act. It is the responsibility of the project proponent to survey the area for any migratory bird nests. If there is an eagle nest on-site while work is on-going, eagles may be disturbed. We recommend avoiding and minimizing disturbance to eagles whenever practicable. If you cannot avoid eagle disturbance, you may seek a permit. A nest take permit is always required for removal, relocation, or obstruction of an eagle nest. For communication and wind energy projects, please refer to additional guidelines below.

Migratory Birds - The Migratory Bird Treaty Act (MBTA) prohibits the taking, killing, possession, transportation, and importation of migratory birds, their eggs, parts, and nests, except when specifically authorized by the Service. The Service has the responsibility under the MBTA to proactively prevent the mortality of migratory birds whenever possible and we encourage implementation of recommendations that minimize potential impacts to migratory birds. Such measures include clearing forested habitat outside the nesting season (generally March 1 to August 31) or conducting nest surveys prior to clearing to avoid injury to eggs or nestlings.

Communication Towers - Construction of new communications towers (including radio, television, cellular, and microwave) creates a potentially significant impact on migratory birds, especially some 350 species of night-migrating birds. However, the Service has developed voluntary guidelines for minimizing impacts.

Transmission Lines - Migratory birds, especially large species with long wingspans, heavy bodies, and poor maneuverability can also collide with power lines. In addition, mortality can occur when birds, particularly hawks, eagles, kites, falcons, and owls, attempt to perch on uninsulated or unguarded power poles. To minimize these risks, please refer to guidelines developed by the Avian Power Line Interaction Committee and the Service. Implementation of these measures is especially important along sections of lines adjacent to wetlands or other areas that support large numbers of raptors and migratory birds.

Wind Energy - To minimize impacts to migratory birds and bats, wind energy projects should follow the Service's Wind Energy Guidelines. In addition, please refer to the Service's Eagle Conservation Plan Guidance, which provides guidance for conserving bald and golden eagles in the course of siting, constructing, and operating wind energy facilities.

State Department of Natural Resources Coordination
While it is not required for your Federal section 7 consultation, please note that additional state endangered or threatened species may also have the potential to be impacted. **Please contact the Minnesota or Wisconsin Department of Natural Resources for information on state listed species that may be present in your proposed project area.**

Minnesota
Minnesota Department of Natural Resources - Endangered Resources Review Homepage
Email: Review.NHIS@state.mn.us

Wisconsin
Wisconsin Department of Natural Resources - Endangered Resources Review Homepage
Email: DNRERReview@wi.gov

We appreciate your concern for threatened and endangered species. Please feel free to contact our office with questions or for additional information.

Attachment(s):

- Official Species List
- USFWS National Wildlife Refuges and Fish Hatcheries
- Bald & Golden Eagles
- Migratory Birds
- Wetlands

OFFICIAL SPECIES LIST

This list is provided pursuant to Section 7 of the Endangered Species Act, and fulfills the requirement for Federal agencies to "request of the Secretary of the Interior information whether any species which is listed or proposed to be listed may be present in the area of a proposed action".

This species list is provided by:

Minnesota-Wisconsin Ecological Services Field Office
3815 American Blvd East
Bloomington, MN 55425-1659
(952) 858-0793

PROJECT SUMMARY

Project Code: 2025-0102816
Project Name: Twig Area Trail Riders
Project Type: Recreation - Maintenance / Modification
Project Description: Trail improvements to support safe and sustainable use by ATVs.
Project Location:

The approximate location of the project can be viewed in Google Maps: https://www.google.com/maps/@46.730227400000004,-92.45628502030219,14z

Counties: Carlton and St. Louis counties, Minnesota

ENDANGERED SPECIES ACT SPECIES

There is a total of 7 threatened, endangered, or candidate species on this species list.

Species on this list should be considered in an effects analysis for your project and could include species that exist in another geographic area. For example, certain fish may appear on the species list because a project could affect downstream species.

IPaC does not display listed species or critical habitats under the sole jurisdiction of NOAA Fisheries[1], as USFWS does not have the authority to speak on behalf of NOAA and the Department of Commerce.

See the "Critical habitats" section below for those critical habitats that lie wholly or partially within your project area under this office's jurisdiction. Please contact the designated FWS office if you have questions.

---

1. NOAA Fisheries, also known as the National Marine Fisheries Service (NMFS), is an office of the National Oceanic and Atmospheric Administration within the Department of Commerce.

MAMMALS

NAME	STATUS
Canada Lynx *Lynx canadensis* Population: Wherever Found in Contiguous U.S. There is **final** critical habitat for this species. Your location overlaps the critical habitat. Species profile: https://ecos.fws.gov/ecp/species/3652	Threatened
Gray Wolf *Canis lupus* Population: MN There is **final** critical habitat for this species. Your location overlaps the critical habitat. Species profile: https://ecos.fws.gov/ecp/species/4488	Threatened
Northern Long-eared Bat *Myotis septentrionalis* No critical habitat has been designated for this species. Species profile: https://ecos.fws.gov/ecp/species/9045	Endangered
Tricolored Bat *Perimyotis subflavus* No critical habitat has been designated for this species. Species profile: https://ecos.fws.gov/ecp/species/10515	Proposed Endangered

BIRDS

NAME	STATUS
Rufa Red Knot *Calidris canutus rufa* There is **proposed** critical habitat for this species. Your location does not overlap the critical habitat. Species profile: https://ecos.fws.gov/ecp/species/1864	Threatened

INSECTS

NAME	STATUS
Monarch Butterfly *Danaus plexippus* There is **proposed** critical habitat for this species. Your location does not overlap the critical habitat. Species profile: https://ecos.fws.gov/ecp/species/9743	Proposed Threatened
Suckley's Cuckoo Bumble Bee *Bombus suckleyi* Population: No critical habitat has been designated for this species. Species profile: https://ecos.fws.gov/ecp/species/10885	Proposed Endangered

CRITICAL HABITATS

There are 2 critical habitats wholly or partially within your project area under this office's jurisdiction.

NAME	STATUS
Canada Lynx *Lynx canadensis*	Final

NAME	STATUS
https://ecos.fws.gov/ecp/species/3652#crithab	
Gray Wolf *Canis lupus* https://ecos.fws.gov/ecp/species/4488#crithab	Final

USFWS NATIONAL WILDLIFE REFUGE LANDS AND FISH HATCHERIES

Any activity proposed on lands managed by the National Wildlife Refuge system must undergo a 'Compatibility Determination' conducted by the Refuge. Please contact the individual Refuges to discuss any questions or concerns.

THERE ARE NO REFUGE LANDS OR FISH HATCHERIES WITHIN YOUR PROJECT AREA.

BALD & GOLDEN EAGLES

Bald and Golden Eagles are protected under the Bald and Golden Eagle Protection Act [2] and the Migratory Bird Treaty Act (MBTA) [1]. Any person or organization who plans or conducts activities that may result in impacts to Bald or Golden Eagles, or their habitats, should follow appropriate regulations and consider implementing appropriate avoidance and minimization measures, as described in the various links on this page.

---

1. The Bald and Golden Eagle Protection Act of 1940.
2. The Migratory Birds Treaty Act of 1918.
3. 50 C.F.R. Sec. 10.12 and 16 U.S.C. Sec. 668(a)

BALD & GOLDEN EAGLES INFORMATION WAS NOT AVAILABLE WHEN THIS SPECIES LIST WAS GENERATED. PLEASE CONTACT THE FIELD OFFICE FOR FURTHER INFORMATION.

MIGRATORY BIRDS

The Migratory Bird Treaty Act (MBTA) [1] prohibits the take (including killing, capturing, selling, trading, and transport) of protected migratory bird species without prior authorization by the Department of Interior U.S. Fish and Wildlife Service (Service). The incidental take of migratory birds is the injury or death of birds that results from, but is not the purpose, of an activity. The Service interprets the MBTA to prohibit incidental take.

---

1. The Migratory Birds Treaty Act of 1918.
2. The Bald and Golden Eagle Protection Act of 1940.
3. 50 C.F.R. Sec. 10.12 and 16 U.S.C. Sec. 668(a)

MIGRATORY BIRD INFORMATION WAS NOT AVAILABLE WHEN THIS SPECIES LIST WAS GENERATED. PLEASE CONTACT THE FIELD OFFICE FOR FURTHER INFORMATION.

WETLANDS

Impacts to NWI wetlands and other aquatic habitats may be subject to regulation under Section 404 of the Clean Water Act, or other State/Federal statutes.

For more information please contact the Regulatory Program of the local U.S. Army Corps of Engineers District.

Please note that the NWI data being shown may be out of date. We are currently working to update our NWI data set. We recommend you verify these results with a site visit to determine the actual extent of wetlands on site.

FRESHWATER FORESTED/SHRUB WETLAND

- PSS1Cb
- PSS3/EM1Dg
- PFO1/2D
- PFO1/EM1D
- PFO2Dg
- PSS1Db
- PFO4D
- PSS1C
- PFO2/SS2Dg
- PSS1/EM1D
- PSS3Dg
- PFO1/SS1A
- PFO4/SS1D
- PSS1/4D
- PSS1Dd
- PFO2/SS1D
- PFO1D
- PSS1/EM1Db
- PSS4Dg
- PFO1/SS1D
- PFO4Dg
- PSS1/EM1C
- PFO1Cb
- PSS1A

- PFO1/4D
- PFO1/EM1A
- PFO4/SS3Dg
- PSS1D
- PFO2/SS3Dg
- PFO2/4D
- PSS1/EM1Cb
- PFO1A
- PFO2/4Dg
- PFO1/SS1C
- PFO1C

FRESHWATER EMERGENT WETLAND

- PEM1C
- PEM1Db
- PEM1Cb
- PEM1D
- PEM1F
- PEM1Dd
- PEM1Cd
- PEM1A

RIVERINE

- R2UBH
- R3UBH
- R2UBFx
- R2UBG
- R4SBC

FRESHWATER POND

- PUBGb
- PUBG
- PUBF
- PABGb

IPAC USER CONTACT INFORMATION

Agency: Private Entity
Name: Ericka Massa
Address: 418 W Superior St
City: Duluth
State: MN
Zip: 55802
Email emassa@sehinc.com
Phone: 2182592416

Twig Area Trail Riders
Greenhouse Gas Analysis
Gas On-Road Equipment Emissions

							Emission Factors[1]			Emissions			
On- road Equipment	Veh/Day	Days	Miles per Day	Miles	Miles per gal	Est. gals	CO_2	CH_4	N_2O	CO_2	CH_4	N_2O	CO_2e[2]
							kg/gal	g/mile	g/mile	short ton	short ton	short ton	short ton
Gasoline Passenger Cars (2018)	2	120	30	7200	24	300.0	8.78	0.0052	0.0016	2.9	4.13E-05	1.27E-05	2.9
												Total	2.9

Conversion Factors	
g/short ton	907,185
kg/short ton	907

Glocabl Warming Potential	
CO_2	1
CH_4	28
N_2O	265

Notes

[1] EPA Emission Factors for Greenhouse Gas Inventories Tables 2, 3, and 4 (updated January 15, 2025) https://www.epa.gov/system/files/documents/2025-01/ghg-emission-factors-hub-2025.pdf

[2] CO2e emissions calculated using Global Warming Potentials from 40 CFR Part 98 Subpart A Table A-1

Twig Area Trail Riders
Greenhouse Gas Analysis
Diesel Off-Road Equipment Emissions

						Emission Factors[1]			Emissions			
Off-road Equipment	No. Vehicles	Consumption Rate (gal / hr per hp-hr)[3]	Engine Size (hp)	Hours	Total gals	CO_2	CH_4	N_2O	CO_2	CH_4	N_2O	CO_2e[2]
						kg/gal	g/gal	g/gal	short ton	short ton	short ton	short ton
Bulldozer / Loader	1	0.05	125	1440	9,000	10.21	1.01	0.94	101.29	1.00E-02	9.33E-03	104.0
Roller/ Compactor	1	0.05	125	1440	9,000	10.21	1.01	0.94	101.29	1.00E-02	9.33E-03	104.0
											Total	**208.1**

Conversion Factors	
g/short ton	907,185
kg/short ton	907
Maximum Hours	7,300

Global Warming Potential	
CO_2	1
CH_4	28
N_2O	265

Notes

[1] EPA Emission Factors for Greenhouse Gas Inventories Tables 2 and 5 (updated January 15, 2025) https://www.epa.gov/system/files/documents/2025-01/ghg-emission-factors-hub-2025.pdf

[2] CO_2e emissions calculated using Global Warming Potentials from 40 CFR Part 98 Subpart A Table A-1 ($CO_2e = 1*CO_2+25*CH_4+298*N_2O$)

[3] Microsoft Word - Guidelines for Calculating Emissions from Internal Combustion Engines - March 2023 - FINAL.docx (aqmd.gov)

Twig Area Trail Riders
Greenhouse Gas Analysis
Gas On-Road Equipment Emissions

					Emission Factors[1]			Emissions			
On- road Equipment	Estimated Annual ATVs	Miles	Miles per gal	Est. gals	CO_2	CH_4	N_2O	CO_2	CH_4	N_2O	CO_2e[2]
					kg/gal	g/mile	g/mile	short ton	short ton	short ton	short ton
Recreational Vehicle (2-stroke)	2328	509.9	10	118,704.72	8.78	9.86	0.11	1042.2	1.2	0.013	**1078.5**
Recreational Vehicle (4-stroke)	2328	509.9	10	118,704.72	8.78	2.74	1.49	1042.2	0.3	0.2	**1098.2**

Conversion Factors	
g/short ton	907,185
kg/short ton	907

Glocabl Warming Potential	
CO_2	1
CH_4	28
N_2O	265

Notes

[1] EPA Emission Factors for Greenhouse Gas Inventories Tables 2, 3, and 4 (updated January 15, 2025) https://www.epa.gov/system/files/documents/2025-01/ghg-emission-factors-hub-2025.pdf

[2] CO2e emissions calculated using Global Warming Potentials from 40 CFR Part 98 Subpart A Table A-1

Twig Area Trail Riders
Greenhouse Gas Analysis
MN GHG Reduction Goals

Description	CO_2e (short tons)
Project First Year Total Emissions	1,309.2
2020 MN Emission & Next Generation (NGA) Goal	88,754,387
Project's First Year % of NGA Goal	0.0015%
Project Annual Emissions over 50 Year Net Lifetime	55,121.2
Project's Annual Lifetime % of NGA Goal	0.06%